Rockchip RK3568B2 Datasheet

Rockchip Confidential

Revision History

Date	Revision	Description
2024-06-21	2.1	Update the MIPI DSI TX dual mode resolution; Update the operating temperature
2023-09-26	2.0	Add the support for dual LVDS; Update the description about DDR and operating temperature
2023-05-22	1.2	Update CAN related feature Update the thermal parameter
2022-09-29	1.1	Update the JPEG decoder information
2021-07-01	1.0	Initial release

Copyright © 2024, Rockchip Electronics Co., Ltd.

Table of Content

Table of Content 2
Figure Index 3
Table Index 4
Warranty Disclaimer 5
Chapter 1 Introduction 6
1.1 Overview 6
1.2 Features 6
1.3 Block Diagram 19
Chapter 2 Package Information 20
2.1 Order Information 20
2.2 Top Marking 20
2.3 FCCSP636L Dimension 20
2.4 MSL Information 22
2.5 Lead Finish/Ball Material Information 22
2.6 Pin Number List 23
2.7 Power/Ground IO Description 29
2.8 Function IO Description 32
2.9 IO Pin Name Description 41
Chapter 3 Electrical Specification 53
3.1 Absolute Ratings 53
3.2 Recommended Operating Conditions 54
3.3 DC Characteristics 55
3.4 Electrical Characteristics for General IO 56
3.5 Electrical Characteristics for PLL 57
3.6 Electrical Characteristics for USB 2.0 Interface 57
3.7 Electrical Characteristics for DDR IO 58
3.8 Electrical Characteristics for TSADC 59
3.9 Electrical Characteristics for MIPI DSI 59
3.10 Electrical Characteristics for MIPI CSI 59
3.11 Electrical Characteristics for HDMI 59
3.12 Electrical Characteristics for multi-PHY 60
Chapter 4 Thermal Management 61
4.1 Overview 61
4.2 Package Thermal Characteristics 61

Rockchip Confidential

Figure Index

Fig.1-1 Block Diagram 19
Fig.2-1 Package definition 20
Fig.2-2 Package Top View 20
Fig.2-3 Package bottom view.....21
Fig.2-4 Package side view 21
Fig.2-5 Package dimension.....22

Rockchip Confidential

Table Index

Table 2-1 Pin Number List Information 23
Table 2-2 Power/Ground IO information 29
Table 2-3 Function IO description 32
Table 2-4 IO function description list 41
Table 3-1 Absolute ratings 53
Table 3-2 Recommended operating conditions 54
Table 3-3 DC Characteristics 55
Table 3-4 Electrical Characteristics for Digital General IO 56
Table 3-5 Electrical Characteristics for Frac PLL 57
Table 3-6 Electrical Characteristics for Int-PLL 57
Table 3-7 Electrical Characteristics for USB 2.0 Interface 57
Table 3-8 Electrical Characteristics for DDR IO 58
Table 3-9 Electrical Characteristics for TSADC 59
Table 3-10 Electrical Characteristics for MIPI DSI 59
Table 3-11 Electrical Characteristics for MIPI CSI 59
Table 3-12 Electrical Characteristics for HDMI 59
Table 3-13 Electrical Characteristics for PCIe PHY 60
Table 4-1 Thermal Resistance Characteristics 61

Rockchip Confidential

Warranty Disclaimer

Copyright © 2024 Rockchip Electronics Co., Ltd. All rights reserved.
No part of this document may be reproduced, transmitted or used in any form or by any means without the written prior consent of Rockchip Electronics Co., Ltd.

Trademark

Rockchip is a registered trademark of Rockchip Electronics Co., Ltd. in the People's Republic of China and other countries/areas. Other brands, product names mentioned in this document are the property of their respective owners.

Disclaimer

Rockchip Electronics Co., Ltd. ("Rockchip") may make changes to any information in this document at any time without any prior notice.
Information in this document is provided just as a reference or typical applications. All or part of product features described in this document may not be within the purchase scope or the usage scope, and may be subject to the third party licensing requirements. All statements, information in this document is provided "AS IS" without warranties of any kind, either express or implied. Actual performance of Rockchip products may vary in different applications. Third party licenses maybe required to use some features supported by Rockchip products. Customers shall be solely and exclusively responsible to obtain all appropriately required third party licenses prior to its such use. Should customers use the features supported by Rockchip products without any required third party license, customers shall indemnify and hold Rockchip and its subsidiaries, affiliates as well as distributors harmless against all claims, costs, damages, and expenses, and reasonable attorney fees arising out of any claim associated with such unauthorized use.
Rockchip products are not intended for use in military, airplane, medical devices, lifesaving or life sustaining applications ("Unintended Uses"). Customers shall take any and all actions to ensure using Rockchip products in a lawful manner and shall be liable for Unintended Uses.

Rockchip Confidential

Chapter 1 Introduction

1.1 Overview

RK3568B2 is a high-performance and low power quad-core application processor designed for personal mobile internet device and AIoT equipments.

Many embedded powerful hardware engines are provided to optimize performance for high-end application. RK3568B2 supports almost full-format H.264 decoder by 4K@60fps, H.265 decoder by 4K@60fps, also support H.264/H.265 encoder by 1080p@60fps, high-quality JPEG encoder/decoder.

Embedded 3D GPU makes RK3568B2 completely compatible with OpenGL ES 1.1/2.0/3.2, OpenCL 2.0 and Vulkan 1.1. Special 2D hardware engine will maximize display performance and provide very smoothly operation.
The build-in NPU supports INT8/INT16/FP16/BFP16 hybrid operation. In addition, with its strong compatibility, network models based on a series of frameworks such as TensorFlow/MXNet/PyTorch/Caffe can be easily converted.

RK3568B2 has high-performance external memory interface(DDR3/DDR3L/DDR4 /LPDDR3/LPDDR4/LPDDR4X) capable of sustaining demanding memory bandwidths.

1.2 Features

1.2.1 Microprocessor

- Quad-core ARM Cortex-A55 CPU
- ARM Neon Advanced SIMD (single instruction, multiple data) support for accelerated media and signal processing computation
- Include VFP hardware to support single and double-precision operations
- ARMv8 Cryptography Extensions
- Integrated 32KB L1 instruction cache, 32KB L1 data cache with ECC
- 512KB unified system L3 cache with ECC
- TrustZone technology support
- Separate power domains for CPU core system to support internal power switch and externally turn on/off based on different application scenario
  - PD_A55_0: 1st Cortex-A55 + Neon + FPU + L1 I/D Cache
  - PD_A55_1: 2nd Cortex-A55 + Neon + FPU + L1 I/D Cache
  - PD_A55_2: 3rd Cortex-A55 + Neon + FPU + L1 I/D Cache
  - PD_A55_3: 4th Cortex-A55 + Neon + FPU + L1 I/D Cache
- One isolated voltage domain

1.2.2 Neural Process Unit

- Neural network acceleration engine with processing performance up to 1 TOPS
- Support INT8/INT16/FP16/BFP16 MAC hybrid operation
- Support deep-learning frameworks: TensorFlow, TF-lite, Pytorch, Caffe, ONNX, MXNet, Keras, Darknet
- One isolated voltage domain

1.2.3 Memory Organization

- Internal on-chip memory
  - BootROM
  - SYSTEM_SRAM in the voltage domain of VD_LOGIC
  - PMU_SRAM in the voltage domain of VD_PMU for low power application

- External off-chip memory
  - DDR3/DDR3L/DDR4/LPDDR3/LPDDR4/LPDDR4X①
  - SPI Nor/Nand Flash

Rockchip Confidential

- eMMC
- SD_Card
- 8bits Async Nand Flash
- 8bits toggle Nand Flash
- 8bits ONFI Nand Flash

1.2.4 Internal Memory

- Internal BootRom
  - Support system boot from the following device:
    - SPI Flash interface
    - Nand Flash
    - eMMC interface
    - SDMMC interface
  - Support system code download by the following interface:
    - USB OTG interface (Device mode)

- SYSTEM_SRAM
  - Size: 64KB

- PMU_SRAM
  - Size: 8KB

1.2.5 External Memory or Storage device

- Dynamic Memory Interface (DDR3/DDR3L/DDR4/LPDDR3/LPDDR4/LPDDR4X)
  - Compatible with JEDEC standards
  - Compatible with DDR3-2133/DDR3L-2133/LPDDR3-2133/DDR4-3200/LPDDR4-3200/LPDDR4X-3200
  - Support 32bits data width, 2 ranks (chip selects), total addressing space is 8GB(max) for DDR3/DDR3L/DDR4
  - Support 32bits data width, 4 ranks (chip selects), total addressing space is 8GB(max) for LPDDR3/LPDDR4/LPDDR4X
  - Low power modes, such as power-down and self-refresh for SDRAM
  - Compensation for board delays and variable latencies through programmable pipelines
  - Support 8bits ECC for DDR3/DDR3L/DDR4
  - Programmable output and ODT impedance with dynamic PVT compensation

- eMMC Interface
  - Compatible with standard iNAND interface
  - Compatible with eMMC specification 4.41, 4.51, 5.0 and 5.1
  - Support three data bus width: 1bit, 4bits or 8bits
  - Support HS200;
  - Support CMD Queue

- SD/MMC Interface
  - Compatible with SD3.0, MMC ver4.51
  - Data bus width is 4bits

- Nand Flash Interface
  - Support async nand flash, each channel 8bits, up to 4 banks
  - Support ONFI Synchronous Flash Interface, each channel 8bits, up to 4 banks
  - Support Toggle Flash Interface, each channel 8bits, up to 4 banks
  - Support sync DDR nand flash, each channel 8bits, up to 4 banks
  - Support LBA nand flash in async or sync mode
  - Up to 70bits/1KB hardware ECC
  - For DDR nand flash, support DLL bypass and 1/4 or 1/8 clock adjust, maximum clock rate is 75MHz

Rockchip Confidential

- For async nand flash, support configurable interface timing , maximum data rate is 16bits/cycle

- SPI Flash Interface
  - Support Serial NOR Flash, NAND Flash, pSRAM and SRAM
  - Support SDR mode
  - Support 1bit/2bit/4bit data width

1.2.6 System Component

- CRU (clock & reset unit)
  - Support clock gating control for individual components
  - One oscillator with 24MHz clock input
  - Support global soft-reset control for whole chip, also individual soft-reset for each component

- MCU
  - 32bits microcontroller core
  - Harvard architecture separate Instruction and Data memories
  - Integrated Programmable Interrupt Controller (IPIC)
  - Integrated Debug Controller with JTAG interface

- PMU(power management unit)
  - 5 separate voltage domains(VD_CORE/VD_LOGIC/VD_NPU/VD_GPU/VD_PMU)
  - 15 separate power domains, which can be power up/down by software based on different application scenes
  - Multiple configurable work modes to save power by different frequency or automatic clock gating control or power domain on/off control

- Timer
  - Six 64bits timers with interrupt-based operation for non-secure application
  - Two 64bits timers with interrupt-based operation for secure application
  - Support two operation modes: free-running and user-defined count
  - Support timer work state checkable

- Watchdog
  - 32bits watchdog counter
  - Counter counts down from a preset value to 0 to indicate the occurrence of a timeout
  - WDT can perform two types of operations when timeout occurs:
    - Generate a system reset
    - First generate an interrupt and if this is not cleared by the service routine by the time a second timeout occurs then generate a system reset
  - Programmable reset pulse length
  - Totally 16 defined-ranges of main timeout period
  - One Watchdog for non-secure application
  - One Watchdog for secure application

- Interrupt Controller
  - Support 3 PPI interrupt sources and 256 SPI interrupt sources input from different components
  - Support 16 software-triggered interrupts
  - Two interrupt outputs (nFIQ and nIRQ) separately for each Cortex-A55, both are low-level sensitive
  - Support different interrupt priority for each interrupt source, and they are always software-programmable

- Mailbox

Rockchip Confidential

- One Mailbox in SoC to service Cortex-A55 and MCU communication
- Support four mailbox elements per mailbox, each element includes one data word, one command word register and one flag bit that can represent one interrupt
- Provide 32 lock registers for software to use to indicate whether mailbox is occupied

- DMAC
  - Two identical DMAC blocks supported(DMAC0/DMAC1)
  - Micro-code programming based DMA
  - The specific instruction set provides flexibility for programming DMA transfers
  - Linked list DMA function is supported to complete scatter-gather transfer
  - Support internal instruction cache
  - Embedded DMA manager thread
  - Support data transfer types with memory-to-memory, memory-to-peripheral, peripheral-to-memory
  - Signals the occurrence of various DMA events using the interrupt output signals
  - Mapping relationship between each channel and different interrupt outputs is software-programmable
  - One embedded DMA controller for system
  - DMAC features:
    - 8 channels totally
    - 32 hardware request from peripherals
    - 2 interrupt outputs

- Trust Execution Environment system
  - Support TrustZone technology for the following components
    - Cortex-A55, support security and non-security mode, switch by software
    - System general DMAC, support some dedicated channels work only in security mode
    - Secure OTP, only can be accessed by Cortex-A55 in secure mode and secure key reader block
      - SYSTEM_SRAM, part of space is addressed only in security mode, detailed size is software-programmable together with TZMA (TrustZone memory adapter)
  - Cipher engine
    - Support SHA-1, SHA-256/224, SHA-512/384, MD5 with hardware padding
    - Support HMAC of SHA-1, SHA-256, SHA-512, MD5 with hardware padding
    - Support AES-128, AES-192, AES-256 encrypt & decrypt cipher
    - Support DES & TDES cipher
    - Support AES ECB/CBC/OFB/CFB/CTR/CTS/XTS/CCM/GCM/CBC-MAC/CMAC mode
    - Support DES/TDES ECB/CBC/OFB/CFB mode
    - Support up to 4096 bits PKA mathematical operations for RSA/ECC
  - Support data scrambling for DDR SDRAM device
  - Support up to 256 bits TRNG Output
  - Support secure OTP
  - Support secure boot
  - Support secure debug
  - Support secure OS

1.2.7 Video CODEC

- Video Decoder
  - H.265 HEVC/MVC Main10 Profile yuv420@L5.1 up to 4096x2304@60fps
  - H.264 AVC/MVC Main10 Profile yuv400/yuv420/yuv422/@L5.1 up to 4096x2304@60fps
  - VP9 Profile0/2 yuv420@L5.1 up to 4096x2304@60fps
  - VP8 verision2,up to 1920x1088@60fps

Rockchip Confidential

- VC1 Simple Profile@low, medium, high levels, Main Profile@low, medium, high levels, Advanced Profile@level0~3,up to 1920x1088@60fps
- MPEG-4 Simple Profile@L0~6,Advanced Simple Profile@L0~5,up to 1920x1088@60fps
- MPEG-2 Main Profile, low, medium and high levels, up to 1920x1088@60fps
- MPEG-1 Main Profile, low, medium and high levels, up to 1920x1088@60fps
- H.263 Profile0,levels 10-70,up to 720x576@60fps

- Video Encoder
  - H.264/AVC BP/MP/HP@level4.2，up to 1920x1080@60fps
  - H.265/HEVC MP@level4.1, up to 1920x1080@60fps (4096x4096@10fps with TILE)
  - Support YUV/RGB video source with rotation and mirror

1.2.8 JPEG CODEC

- JPEG decoder
  - Decoder size is from 48x48 to 8192x8192
  - Support YUV400/YUV411/YUV420/YUV422/YUV440/YUV444
  - Support 1920x1080@120fps
  - Support MJPEG

- JPEG encoder
  - Baseline Non-progressive
  - up to 8192x8192
  - up to 90 million pixels per second

1.2.9 Image Enhancement (IEP module)

- Image format support
  - Input data: YUV420/YUV422 ; semi-planar/planar; UV swap
  - Output data: YUV420/YUV422 ; semi-planar; UV swap; Tile mode
  - YUV down sampling conversion from 422 to 420
  - Max resolution for dynamic image up to 1920x1080

- De-interlace
  - I5O2: Input 5 Fields Output 2 frames mode
  - I5O1T: Input 5 Fields Output 1 Top frame mode
  - I5O1B: Input 5 Fields Output 1 Bottom frame mode
  - I2O2: Input 2 Fields Output 2 frames mode
  - I1O1T: Input 1 Field Output 1 Top frame mode
  - I1O1B: Input 1 Field Output 1 Bottom frame mode
  - PULLDOWN_REC: Pull down Recovery mode
  - DETECT_ONLY: Detect Only mode
  - MVHIST: De-interlace MV Histogram
  - MD: Motion Detection
  - ME: Motion Estimate
  - MC: Motion Compensation
  - EEDI: Enhanced Edge based Interpolation
  - OSD DETECT: On-Screen Display Detection
  - FF DETECT: Frame Field Detection
  - FO DETECT: Field Order Detection
  - PD DETECT: Pull down Detection
  - CC: Combining Check

1.2.10 Graphics Engine

- 3D Graphics Engine:
  - Mali-G52 1-Core-2EE
  - Support OpenGL ES 1.1, 2.0, and 3.2
  - Support Vulkan 1.0 and 1.1

Rockchip Confidential

- Support OpenCL 2.0 Full Profile
- Support 1600Mpix/s fill rate when 800MHz clock frequency
- Support 38.4GLOPs when 800MHz clock frequency

- 2D Graphics Engine:
  - Data format
    - Support input of ARGB/RGB888/RGB565/RGB4444/RGB5551/YUV420/YUV422/YUYV;
    - Support input of YUV422SP10bit/YUV420SP10bit(YUV-8bits out)
    - Support output of ARGB/RGB888/RGB565/RGB4444/RGB5551/YUV420/YUV422/YUYV;
    - Pixel Format conversion, BT.601/BT.709
    - Dither operation, Y dither update;
    - Max resolution: 8192x8192 source, 4096x4096 destination
  - Scaling
    - Down-scaling: Average filter
    - Up-scaling: Bi-cubic filter(source>2048 would use Bi-linear)
    - Arbitrary non-integer scaling ratio，from 1/16 to 16
  - Rotation
    - 0, 90, 180, 270 degree rotation
    - x-mirror, y-mirror& rotation operation
  - BitBLT
    - Block transfer
    - Color palette/Color fill, support with alpha
    - Transparency mode (color keying/stencil test, specified value/value range)
    - Two source BitBLT:
    - A+B=B only BitBLT, A support rotate&scale when B fixed
    - A+B=C second source (B) has same attribute with (C) plus rotation function
  - Alpha Blending
    - New comprehensive per-pixel alpha(color/alpha channel separately)
    - Fading
    - SRC1(R2Y)&&SRC0(YUV)—alpha->DST(YUV)

1.2.11 Video input interface

- Interface and video input processor
  - Support up to 16bit DVP interface (digital parallel input)
  - Support MIPI CSI RX interface
  - Support VICAP block(Video Input Processor)
    - Support video data from DVP
    - Support video data from MIPI CSI
    - Support DVP and MIPI CSI simultaneously
  - Support ISP block(Image Signal Processor)
    - Support video data from DVP
    - Support video data from MIPI CSI

- DVP Interface
  - Support 8bits/10bits/12bits/16bits input
  - Support up to 150MHz input data

- MIPI CSI RX Interface
  - Compatible with the MIPI Alliance Interface specification v1.2
  - Up to 4 data lanes, 2.5Gbps maximum data rate per lane
  - Support MIPI-HS, MIPI-LP mode
  - Support two mode
    - One interface with 1 clock lane and 4 data lanes
    - Two interface, each with 1 clock lane and 2 data lanes

Rockchip Confidential

- VICAP
  - Support BT601 YCbCr 422 8bits input、RAW 8/10/12bits input
  - Support BT656 YCbCr 422 8bits input
  - Support BT1120 YCbCr 422 8/10/12/16bits input, single/dual-edge sampling
  - Support 2/4 mixed BT656/BT1120 YCbCr 422 8bit input
  - Support YUYV sequence configurable
  - Support the polarity of pixel_clk, hsync and vsync configurable
  - Support receiving CSI2 protocol data(up to four IDs)
  - Support receiving DSI protocol data(Video mode/Command mode)
  - Support window cropping
  - Support virtual stride when write to DDR
  - Support NV16/NV12 output for YUV data
  - Support compact/ non-compact output for RAW data

- ISP
  - DVP input: ITU-R BT601/656/1120 with raw8/raw10/raw12/raw16, YUV422
  - MIPI input: RX data lane x1/x2/x4, raw8/raw10/raw12, YUV422
  - 3A: include AE/Histogram, AF, AWB statistics output
  - FPN: Fixed Pattern Noise removal
  - BLC: Black Level Correction
  - DPCC: Static/Dynamic defect pixel cluster correction
  - LSC: Lens shading correction
  - Bayer-2DNR: Bayer-raw De-noising, 2DNR
  - Bayer-3DNR: Bayer-raw De-noising, 3DNR
  - HDR: 2-Frame Merge into High-Dynamic Range
  - DRC: 2-Frame Merge Video Tone mapping
  - Debayer: Advanced Adaptive Demosaic with Chromatic Aberration Correction
  - CCM/CSM: Color correction matrix; RGB2YUV etc.
  - Gamma: Gamma out correction
  - Dehaze/Enhance: Automatic Dehaze and edge enhancement
  - 3DLUT: 3D-Lut Color Palette for Customer
  - LDCH: Lens-distortion in the horizontal direction
  - 2DNR: Advanced Spatial Noise reduce in YUV
  - Sharp: Picture Sharpening & Edge Enhance in YUV
  - CGC: Color Gamut Compression, YUV full range/limit range convert
  - Output Scale*2
  - Maximum resolution is 4096x2304

1.2.12 Display interface

- Display interface
  - Support RGB Parallel Display interface
  - Support BT656/BT1120 interface
  - Support MIPI_DSI interface
  - Support LVDS interface
  - Support HDMI interface
  - Support eDP interface
  - Support EBC inteface
  - Support three simultaneous displays in the following interfaces②
    - RGB/BT1120
    - BT656
    - MIPI_DSI_TX
    - LVDS
    - HDMI
    - eDP
- RGB/BT1120 video output interface
  - Support up to 1920x1080@60Hz

Rockchip Confidential

    - Support RGB(up to 8bit) format
    - Up to 150MHz data rate
- BT656 video output interface
    - Support PAL and NTSC
- MIPI DSI TX interface
    - Compatible with MIPI Alliance Interface specification v1.2
    - Support 2 channel DSI
    - Support 4 data lanes per channel
    - Support 2.5Gbps maximum data rate per lane
    - Up to 1920x1080@60Hz display output for single MIPI mode and 2560*1600@60Hz for dual-MIPI mode
    - Support RGB(up to 8bit) format
- LVDS interface
    - Compliant with the TIA/EIA-644-A LVDS specification
    - Support dual LVDS interfaces
    - Support RGB888 and RGB666 input for LVDS interface
    - Support VESA/JEIDA LVDS data format transfer
- HDMI TX interface
    - Single Physical Layer PHY with support for HDMI1.4 and HDMI2.0 operation
    - For HDMI operation, support for the following:
        - Up to 10 bits Deep Color modes
        - Up to 1080p@120Hz and 4096x2304@60Hz
        - 3-D video formats
    - Support RGB/YUV(up to 10bit) format
    - Support HDCP1.4/2.2
- eDP interface
    - Support 1 eDP 1.3 interface
    - Up to 4 physical lanes of 2.7Gbps/lane
    - Supports Panel Self Refresh(PSR)
    - Support up to 2560x1600@60Hz
    - Support RGB(up to 10bit) format
- EBC interface
    - E-ink EPD compatible
    - Support up to 2200x1650
    - Support 16bit data
    - Up to 16 level gray scale
    - Up to 256 frames every scanning

1.2.13 Video Output Processor

- Video inputs
    - Support 2 cluster layer
        - Support up to 4096x2160 input resolution
        - Support afbcd
        - Support RGB/YUV/YUYV format
        - Support scale up/down ratio 4~1/4
        - Support rotation
    - Support 2 esmart layer
        - Support up to 4096x2160 input resolution
        - Support RGB/YUV/YUYV format
        - Support scale up/down ratio 4~1/4
        - Support 4 regions
    - Support 2 smart layer
        - Support up to 4096x2160 input resolution
        - Support RGB format
        - Support 4 regions
- Overlay
    - Support MAX 6 layers overlay: 2 Cluster/2 ESMART/2 SMART

Rockchip Confidential

  - Support RGB/YUV domain overlay
- Post process
  - HDR
    - HDR10/HDR HLG
    - HDR2SDR/SDR2HDR
  - 3D-LUT/P2I/CSC/BCSH/DITHER/CABC/GAMMA/COLORBAR
- Write back
  - Format: ARGB8888/RGB888/RGB565/YUV420
  - Max resolution: 1920x1080
- Video outputs
  - Video output0, up to 4096x2304@60Hz resolution
  - Video output1, up to 2048x1536@60Hz resolution
  - Video output2, up to 1920x1080@60Hz resolution

1.2.14 Audio Interface

- I2S0 with 8 channel
  - Up to 8 channels TX and 8 channels RX path
  - Audio resolution from 16bits to 32bits
  - Sample rate up to 192KHz
  - Provides master and slave work mode, software configurable
  - Support 3 I2S formats (normal, left-justified, right-justified)
  - Only for HDMI

- I2S1 with 8 channel
  - Up to 8 channels TX and 8 channels RX path
  - Audio resolution from 16bits to 32bits
  - Sample rate up to 192KHz
  - Provides master and slave work mode, software configurable
  - Support 3 I2S formats (normal, left-justified, right-justified)
  - Support 4 PCM formats (early, late1, late2, late3)
  - I2S and PCM mode cannot be used at the same time

- I2S2/I2S3 with 2 channel
  - Up to 2 channels for TX and 2 channels RX path
  - Audio resolution from 16bits to 32bits
  - Sample rate up to 192KHz
  - Provides master and slave work mode, software configurable
  - Support 3 I2S formats (normal, left-justified, right-justified)
  - Support 4 PCM formats (early, late1, late2, late3)
  - I2S and PCM cannot be used at the same time

- PDM
  - Up to 8 channels
  - Audio resolution from 16bits to 24bits
  - Sample rate up to 192KHz
  - Support PDM master receive mode

- TDM
  - supports up to 8 channels for TX and 8 channels RX path
  - Audio resolution from 16bits to 32bits
  - Sample rate up to 192KHz
  - Provides master and slave work mode, software configurable
  - Support 3 I2S formats (normal, left-justified, right-justified)
  - Support 4 PCM formats (early, late1, late2, late3)

- Digital Audio Codec
  - Support 3 channels digital ADC

Rockchip Confidential

- Support 2 channels digital DAC
- Support I2S/PCM interface
- Support I2S/PCM master and slave mode
- Support 4 channels audio transmitting in I2S mode
- Support 2 channels audio receiving in I2S mode
- Support 2 channels audio transmitting or receiving in PCM mode
- Support 16~24 bits sample resolution for both digital ADC and digital DAC
- Both digital ADC and digital DAC support three groups of sample rates. Group 0 are 8KHz/16KHz/32KHz/64KHz/128KHz, group 1 are 11.025KHz/22.05KHz/44.1KHz/88.2KHz/176.4KHz and group 2 are 12KHz/24KHz/48KHz/96KHz/192KHz

- Voice Activity Detection(VAD)
  - Support read voice data from I2S/PDM
  - Support voice amplitude detection
  - Support Multi-Mic array data storing
  - Support a level combined interrupt

1.2.15 Connectivity

- SDIO interface
  - Compatible with SDIO3.0 protocol
  - 4bits data bus widths

- MAC 10/100/1000 Ethernet Controller
  - Support two identical Ethernet controllers
  - Support 10/100/1000 Mbps data transfer rates with the RGMII interfaces
  - Support 10/100 Mbps data transfer rates with the RMII interfaces
  - Support both full-duplex and half-duplex operation
  - Supports IEEE 802.1Q VLAN tag detection for reception frames
  - Support detection of LAN wake-up frames and AMD Magic Packet frames
  - Support checking IPv4 header checksum and TCP, UDP, or ICMP checksum encapsulated in IPv4 or IPv6 datagram
  - Support for TCP Segmentation Offload (TSO) and UDP Fragmentation Offload (UFO)

- USB 2.0 Host
  - Support two USB2.0 Host
  - Compatible with USB 2.0 specification
  - Supports high-speed(480Mbps), full-speed(12Mbps) and low-speed(1.5Mbps) mode
  - Support Enhanced Host Controller Interface Specification (EHCI), Revision 1.0
  - Support Open Host Controller Interface Specification (OHCI), Revision 1.0a

- Multi-PHY Interface
  - Support three multi-PHYs with PCIe2.1/SATA3.0/USB3.0/QSGMII controller
  - Up to one USB3 Host controller
  - Up to one USB3 OTG controller
  - Up to one PCIe2.1 controller
  - Up to three SATA controller
  - Up to one QSGMII or SGMII PCS controller
  - Multi-PHY0 support one of the following interfaces
    - USB3.0 OTG
    - SATA0
  - Multi-PHY1 support one of the following interfaces
    - USB3.0 Host
    - SATA1
    - QSGMII/SGMII
  - Multi-PHY2 support one of the following interfaces
    - PCIe2.1
    - SATA2
    - QSGMII/SGMII

Rockchip Confidential

- USB 3.0 xHCI Host Controller
  - Support 1 USB2.0 port and 1 Super-Speed port
  - Concurrent USB3.0/USB2.0 traffic, up to 8.48Gbps bandwidth
  - Support standard or open-source xHCI and class driver
- USB 3.0 Dual-Role Device (DRD) Controller
  - Static USB3.0 Device
  - Static USB3.0 xHCI host
  - USB3.0/USB2.0 OTG A device and B device basing on ID
- PCIe2.1 interface
  - Compatible with PCI Express Base Specification Revision 3.0
  - Support Root Complex(RC) mode
  - Support 2.5Gbps and 5.0Gbps serial data transmission rate per lane per direction
  - Support one lane
- SATA interface
  - Compatible with Serial ATA 3.3 and AHCI Revision 1.3.1
  - Support eSATA
  - Support 1.5Gb/s, 3.0Gb/s, 6.0Gb/s
  - Support 3 SATA controller
- QSGMII/SGMII interface
  - Support one QSGMII, only two GMII controller supported
  - Support SGMII mode with 1000Mbps

- PCIe3.0 PHY Interface
  - Support PCIe3.1(8Gbps) protocol and backward compatible with the PCIe2.1 and PCIe1.1 protocol
  - Support two lane
  - Support two PCIe controller with x1 mode or one PCIe controller with x2 mode
  - Two lane PCIe3.0 controller
    - Compatible with PCI Express Base Specification Revision 3.0
    - Dual operation mode: Root Complex(RC)and End Point(EP)
    - Support 2.5Gbps, 5.0Gbps and 8.0Gbps serial data transmission rate per lane per direction
    - Support two lanes
  - One lane PCIe3.0 controller
    - Compatible with PCI Express Base Specification Revision 3.0
    - Support Root Complex(RC) mode
    - Support 2.5Gbbps, 5.0Gbps and 8.0Gbps serial data transmission rate per lane per direction
    - Support one lane

- SPI interface
  - Support four SPI Controller
  - Support one chip-select output and the other support two chip-select output
  - Support serial-master and serial-slave mode, software-configurable

- I2C interface
  - Support six I2C interface
  - Support 7bits and 10bits address mode
  - Software programmable clock frequency
  - Data on the I2C-bus can be transferred at rates of up to 100Kbit/s in the Standard-mode, up to 400Kbit/s in the Fast-mode or up to 1 Mbit/s in Fast-mode Plus.

- UART Controller
  - Support ten UART interfaces
  - Embedded two 64-byte FIFO for TX and RX operation respectively
  - Support 5bits,6bits,7bits,8bits serial data transmit or receive

Rockchip Confidential

- Standard asynchronous communication bits such as start, stop and parity
- Support different input clock for UART operation to get up to 4Mbps baud rate
- Support auto flow control mode for UART0/UART1/UART3/UART4/UART5

- Smart Card
  - Support ISO-7816
  - support card activation and deactivation
  - support cold/warm reset
  - support Answer to Reset(ATR) response reception
  - support T0 for asynchronous half-duplex character transmission
  - support T1 for asynchronous half-duplex block transmission
  - support automatic operating voltage class selection
  - support adjustable clock rate and bit (baud) rate
  - support configurable automatic byte repetition

- PWM
  - Sixteen on-chip PWMs(PWM0~PWM15) with interrupt-based operation
  - Programmable pre-scaled operation to bus clock and then further scaled
  - Embedded 32bits timer/counter facility
  - Support capture mode
  - Support continuous mode or one-shot mode
  - Provides reference mode and output various duty-cycle waveform
  - Optimized for IR application for PWM3,PWM7,PWM11 and PWM15
  -
- CAN Bus③
  - Support 3 CAN buses
  - Support CAN 2.0B protocol
  - Support transmit or receive CAN standard frame
  - Support transmit or receive CAN extended frame
  - Support transmit or receive data frame, remote frame, overload frame, error frame and frame interval

1.2.16 Others

- Multiple group of GPIO
  - All of GPIOs can be used to generate interrupt to CPU
  - Support level trigger and edge trigger interrupt
  - Support configurable polarity of level trigger interrupt
  - Support configurable rising edge, falling edge and both edge trigger interrupt

- Temperature Sensor(TSADC)
  - Up to 50KS/s sampling rate
  - Support two temperature sensor
  - -20~120℃ temperature range and 5℃ temperature resolution
  - Support two channels

- Successive Approximation ADC (SARADC)
  - 10bits resolution
  - Up to 1MS/s sampling rate
  - 8 single-ended input channels

- OTP
  - Support 8K bits Size, 7K bits for secure application
  - Support Program/Read/Idle mode

- Package Type
  - FCCSP636L (body: 19mm x 19mm; ball size: 0.35mm; ball pitch: 0.65mm)

Rockchip Confidential

Notes:

① DDR3/DDR3L/DDR4/LPDDR3/LPDDR4/LPDDR4X are not used simultaneously

② LVDS interface can not be used when dual-MIPI mode is enabled.

③ MIPI interface cannot be used when dual-LVDS mode is enabled.

④Caution: The CAN protocol has defect, confirm peripheral compatibility before using. Please use it with caution and refer to the AN description from FAE window.

Rockchip Confidential

1.3 Block Diagram

The following diagram shows the basic block diagram.

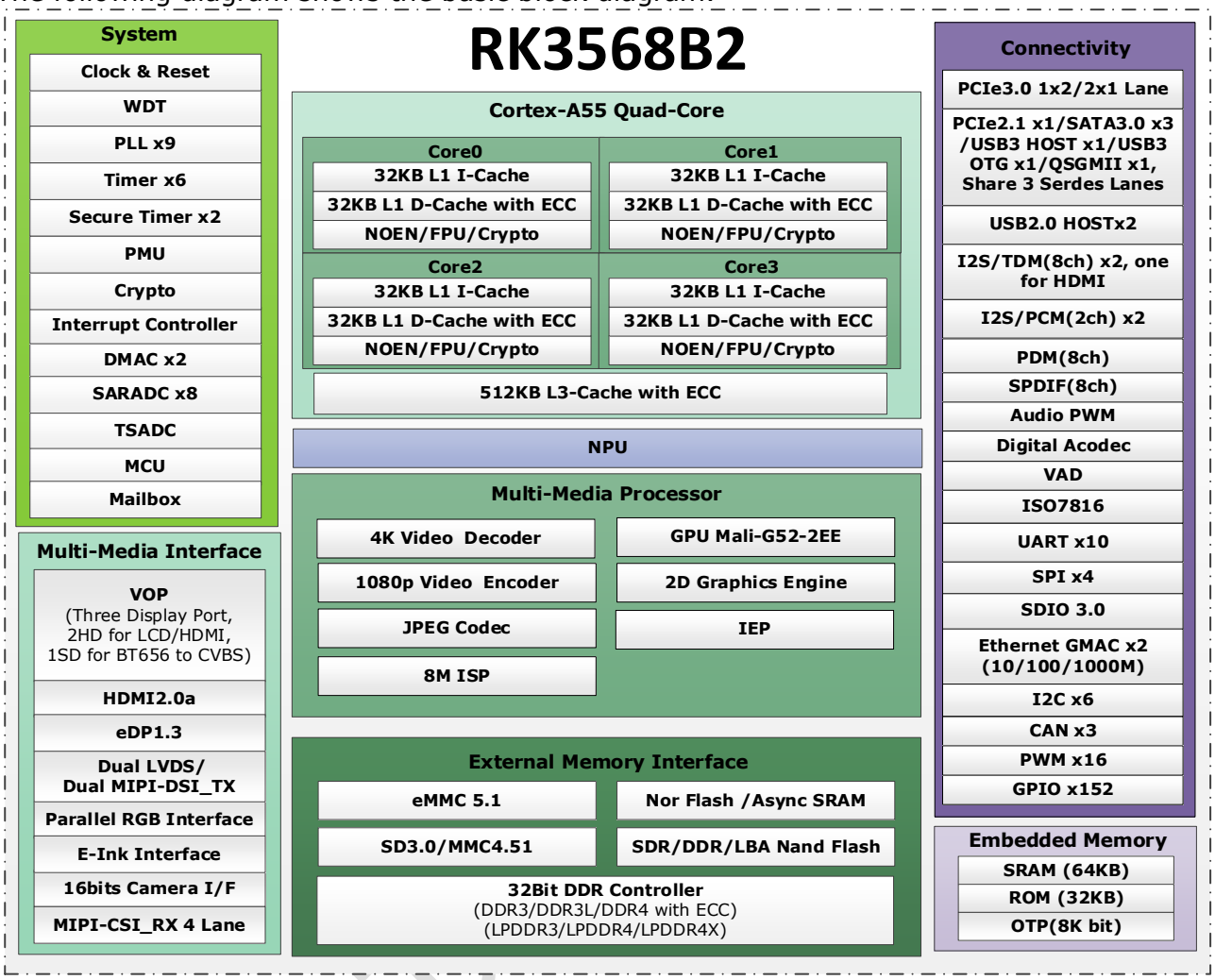

Fig.1-1 Block Diagram

Rockchip

Chapter 2 Package Information

2.1 Order Information

Orderable Device	RoHS status	Package	Package QTY	Device Feature
RK3568B2	RoHS	FCCSP636L	700 pcs	Quad core application processor

2.2 Top Marking

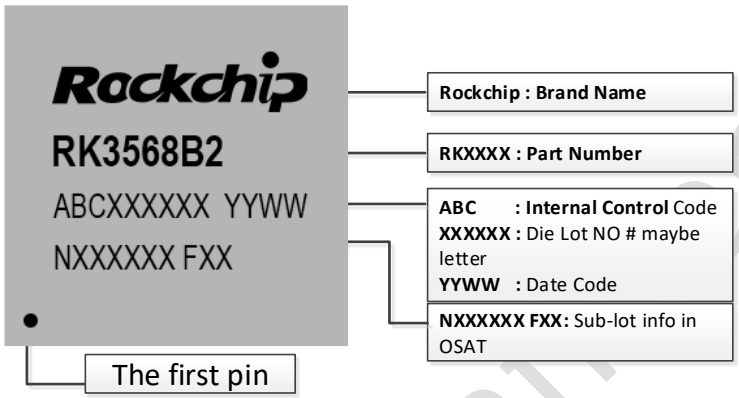

Fig.2-1 Package definition

2.3 FCCSP636L Dimension

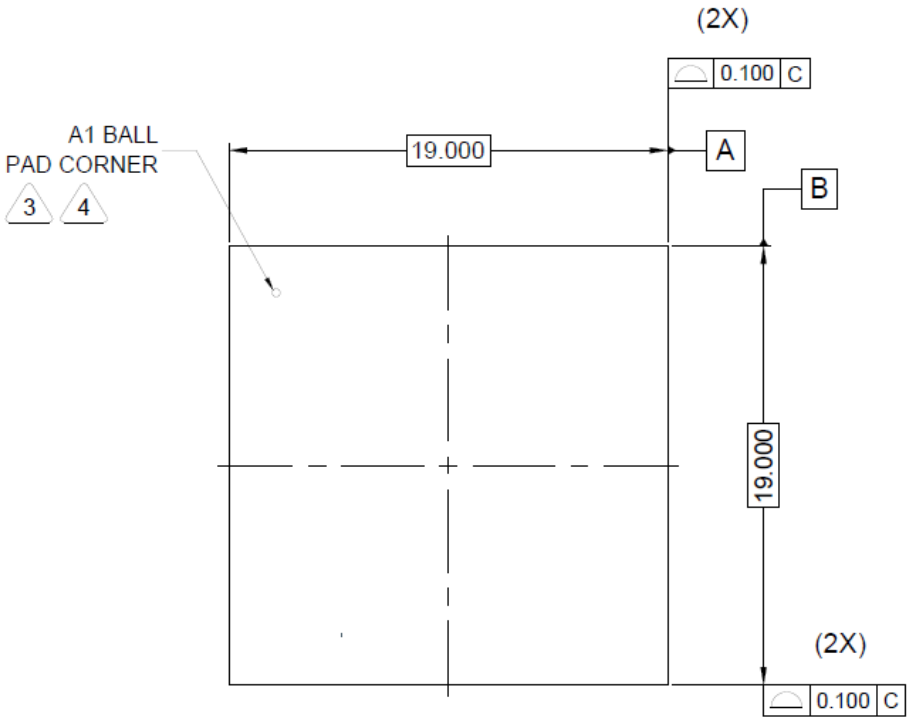

Fig.2-2 Package Top View

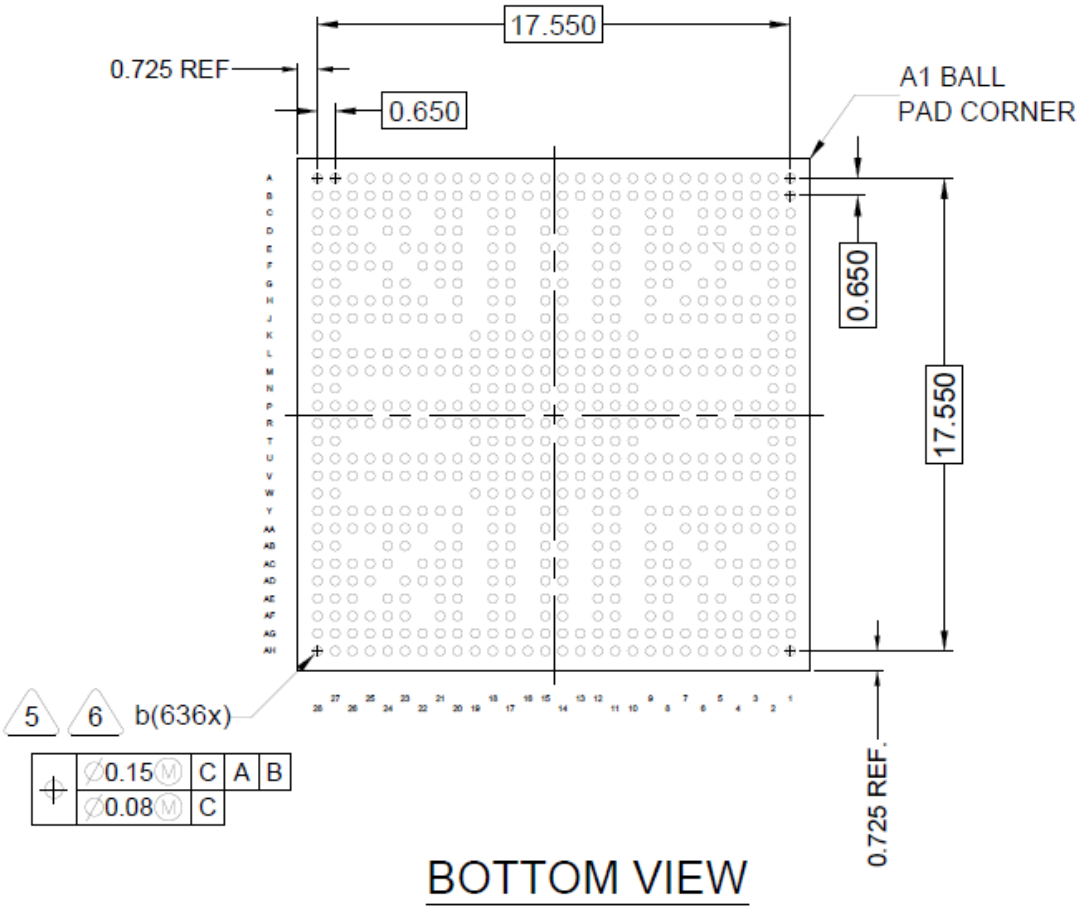

Fig.2-3 Package bottom view

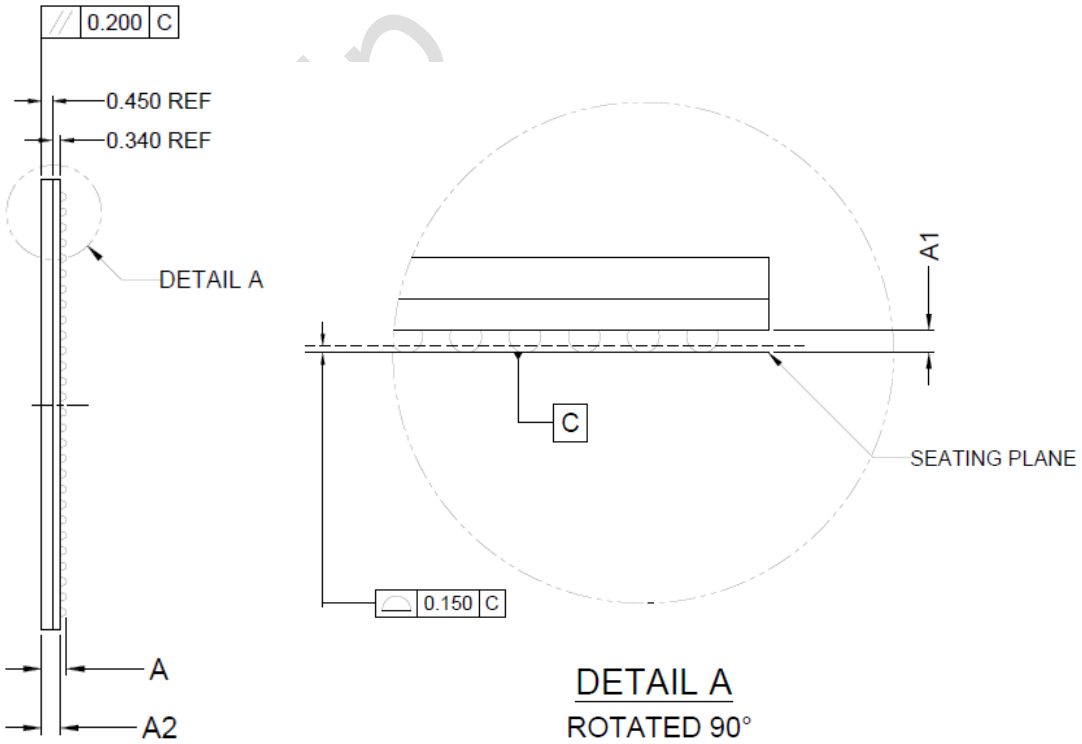

Fig.2-4 Package side view

DIMENSION	MINIMUM	NOMINAL	MAXIMUM
A	0.969	1.040	1.111
A1	0.200	0.250	0.300
A2	0.740	0.790	0.840
b	0.300	0.350	0.400
NUMBER OF BALL 636			

Fig.2-5 Package dimension

2.4 MSL Information

Moisture sensitivity level：MSL3

2.5 Lead Finish/Ball Material Information

Lead finish/Ball material：SnAgCu

Rockchip Confidential

2.6 Pin Number List

Table 2-1 Pin Number List Information

Pin Name	Pin	Pin Name	Pin
VSS_1	A1	SARADC_VIN5	F22
DDR4_CS0n/LPDDR4_CS0n_A/DDR3_ODT1/LPDDR3_ODT0/AC25	A2	I2S2_LRCK_RX_M0/GMAC0_RXDV_CRS/UART6_CTSn_M0/SPI1_CS0_M0/GPIO2_C0_d	F24
VSS_2	A3	I2S2_SCLK_TX_M0/GMAC0_MCLKINOUT/UART7_CTSn_M0/SPI2_MISO_M0/GPIO2_C2_d	F25
DDR4_CLKN/LPDDR4_CLKN_A/DDR3_CLKN/LPDDR3_CLKN/AC24	A4	I2S2_SDI_M0/GMAC0_RXER/UART8_TX_M0/SPI2_CS1_M0/GPIO2_C5_d	F26
DDR4_A9/LPDDR4_CLKN_B/DDR3_A5/-/AC9	A5	GMAC0_RXD0/UART1_CTSn_M0/SPI1_MISO_M0/GPIO2_B6_u	F27
VSS_3	A6	GMAC0_TXD0/UART1_RX_M0/GPIO2_B3_u	F28
DDR4_A6/LPDDR4_A1_B/DDR3_A13/LPDDR3_A1/AC6	A7	DDR_DQS0P_A/DDR4_DQSL_P_A/LPDDR4_DQS0P_A/DDR3_DQS0P/LPDDR3_DQS1P	G1
DDR4_A7/LPDDR4_ODT0_CA_B/DDR3_A8/-/AC7	A8	DDR_DQS0N_A/DDR4_DQSL_N_A/LPDDR4_DQS0N_A/DDR3_DQS0N/LPDDR3_DQS1N	G2
DDR_DQ1_B/DDR4_DQU5_B/LPDDR4_DQ1_B/DDR3_DQ17/LPDDR3_DQ5	A9	VSS_38	G5
VSS_4	A10	VSS_39	G6
DDR_DQS0P_B/DDR4_DQSU_P_B/LPDDR4_DQS0P_B/DDR3_DQS2P/LPDDR3_DQS0P	A11	VSS_40	G8
DDR_DQ4_B/DDR4_DQU0_B/LPDDR4_DQ4_B/DDR3_DQ20/LPDDR3_DQ2	A12	VSS_41	G9
DDR_DQ13_B/DDR4_DQL5_B/LPDDR4_DQ13_B/DDR3_DQ29/LPDDR3_DQ17	A13	VSS_42	G11
VSS_5	A14	VSS_43	G12
DDR_DQS1N_B/DDR4_DQSL_N_B/LPDDR4_DQS1N_B/DDR3_DQS3N/LPDDR3_DQS2N	A15	VSS_44	G14
DDR_DQ8_B/DDR4_DQL0_B/LPDDR4_DQ8_B/DDR3_DQ24/LPDDR3_DQ18	A16	VSS_45	G15
DDR_DQ10_B/DDR4_DQL4_B/LPDDR4_DQ10_B/DDR3_DQ26/LPDDR3_DQ22	A17	VSS_46	G17
VSS_6	A18	VSS_47	G18
I2S1_MCLK_M0/UART3_RTSn_M0/SCR_CLK/PCIE30X1_PERSTn_M2/GPIO1_A2_d	A19	SARADC_VIN6	G20
I2S1_LRCK_TX_M0/UART4_RTSn_M0/SCR_RST/PCIE30X1_CLKREQn_M2/ACODEC_DAC_SYNC/GPIO1_A5_d	A20	SARADC_VIN4	G21
I2S1_SDO3_M0/I2S1_SDI1_M0/PDM_SDI1_M0/PCIE20_PERSTn_M2/GPIO1_B2_d	A21	I2S2_MCLK_M0/ETH0_REFCLKO_25M/UART7_RTSn_M0/SPI2_CLK_M0/GPIO2_C1_d	G23
FSPI_CLK/FLASH_ALE/GPIO1_D0_d	A22	VSS_48	G24
EMMC_CLKOUT/FLASH_DQS/GPIO1_C5_d	A23	GMAC0_TXD1/UART1_TX_M0/GPIO2_B4_u	G27
EMMC_D0/FLASH_D0/GPIO1_B4_u	A24	GMAC0_TXEN/UART1_RTSn_M0/SPI1_CLK_M0/GPIO2_B5_u	G28
EMMC_D4/FLASH_D4/GPIO1_C0_u	A25	DDR_DQ6_A/DDR4_DQL3_A/LPDDR4_DQ6_A/DDR3_DQ6/LPDDR3_DQ8	H1
EMMC_DATA_STROBE/FSPI_CS1n/FLASH_CLE/GPIO1_C6_d	A26	VSS_49	H2
FSPI_D3/FLASH_CS1n/GPIO1_D4_u	A27	VSS_50	H3
VSS_7	A28	DDR_DQ7_A/DDR4_DQL1_A/LPDDR4_DQ7_A/DDR3_DQ7/LPDDR3_DQ11	H4
CIF_D6/EBC_SDDO6/SDMMC2_DET_M0/I2S1_SDI2_M1/VOP_BT656_D6_M1/GPIO3_D4_d	AA1	DDR_DM0_A/DDR4_DML_A/LPDDR4_DM0_A/DDR3_DM0/LPDDR3_DM1	H5
CIF_D11/EBC_SDDO11/GMAC1_RXD2_M1/PDM_SDI1_M1/GPIO4_A1_d	AA2	VSS_51	H6
CIF_D10/EBC_SDDO10/GMAC1_TXCLK_M1/PDM_CLK1_M1/GPIO4_A0_d	AA3	DDR_RZQ	H7
VSS_133	AA4	DDRPHY_VDDQ_1	H9
CIF_D7/EBC_SDDO7/SDMMC2_PWREN_M0/I2S1_SDI3_M1/VOP_BT656_D7_M1/GPIO3_D5_d	AA5	DDRPHY_VDDQ_2	H11
CIF_D1/EBC_SDDO1/SDMMC2_D1_M0/I2S1_SCLK_TX_M1/VOP_BT656_D1_M1/GPIO3_C7_d	AA6	DDRPHY_VDDQ_3	H12
LCDC_VSYNC/VOP_BT1120_D14/SPI1_MISO_M1/UART5_TX_M1/I2S1_SDO3_M2/GPIO3_C2_d	AA7	DDRPHY_VDDQ_4	H14
VSS_134	AA9	DDRPHY_VDDQ_5	H15
PWM15_IR_M1/SPI3_MOSI_M1/CAN1_TX_M1/PCIE30X2_WAKEn_M2/I2S3_SCLK_M1/GPIO4_C3_d	AA11	VCCIO1	H17
AVSS_24	AA12	VCCIO2	H18
AVSS_25	AA14	OTP_VCC18	H20
AVSS_26	AA15	SARADC_AVDD_1V8	H22
AVSS_27	AA17	I2S2_SDO_M0/GMAC0_MDIO/UART9_CTSn_M0/SPI2_CS0_M0/GPIO2_C4_d	H23
HDMI_TX_REXT	AA18	I2S2_LRCK_TX_M0/GMAC0_MDC/UART9_RTSn_M	H24

Rockchip Confidential

Pin Name	Pin	Pin Name	Pin
		0/SPI2_MOSI_M0/GPIO2_C3_d	
I2C2_SDA_M0/SPI0_MOSI_M0/PCIE20_PERSTn_M0/PWM2_M1/GPIO0_B6_u	AA20	I2S2_SCLK_RX_M0/GMAC0_RXD1/UART6_RTSn_M0/SPI1_MOSI_M0/GPIO2_B7_d	H25
GPIO0_A3_u	AA22	SDMMC0_D2/ARMJTAG_TCK/UART5_CTSn_M0/GPIO1_D7_u	H26
VSS_135	AA23	SDMMC0_CMD/PWM10_M1/UART5_RX_M0/CAN0_TX_M1/GPIO2_A1_u	H27
AVSS_28	AA24	SDMMC0_CLK/TEST_CLKOUT/UART5_TX_M0/CAN0_RX_M1/GPIO2_A2_d	H28
PCIE30_REFCLKN_IN	AA25	DDR_DQ4_A/DDR4_DQL7_A/LPDDR4_DQ4_A/DDR3_DQ4/LPDDR3_DQ13	J1
AVSS_29	AA26	DDR_DQ5_A/DDR4_DQL5_A/LPDDR4_DQ5_A/DDR3_DQ5/LPDDR3_DQ12	J2
PCIE30_TX0N	AA27	VSS_52	J3
PCIE30_TX0P	AA28	DDR_DM1_A/DDR4_DMU_A/LPDDR4_DM1_A/DDR3_DM1/LPDDR3_DM3	J4
CIF_D3/EBC_SDDO3/SDMMC2_D3_M0/I2S1_SDO0_M1/VOP_BT656_D3_M1/GPIO3_D1_d	AB1	VSS_53	J5
VSS_136	AB2	DDR_DQ13_A/DDR4_DQU4_A/LPDDR4_DQ13_A/DDR3_DQ13/LPDDR3_DQ31	J6
CIF_D2/EBC_SDDO2/SDMMC2_D2_M0/I2S1_LRCK_TX_M1/VOP_BT656_D2_M1/GPIO3_D0_d	AB5	DDR_DQ14_A/DDR4_DQU6_A/LPDDR4_DQ14_A/DDR3_DQ14/LPDDR3_DQ30	J7
VSS_137	AB6	DDR_AVSS	J8
LCDC_D8/VOP_BT1120_D0/SPI1_CS0_M1/PCIE30X1_PERSTn_M1/SDMMC2_D0_M1/GPIO3_A1_d	AB8	DDRPHY_VDDQ_6	J9
GPIO4_D2_d	AB9	DDRPHY_VDDQL_1	J11
AVSS_30	AB11	DDRPHY_VDDQL_2	J12
AVSS_31	AB12	DDRPHY_VDDQL_3	J14
AVSS_32	AB14	VDD_CPU_1	J15
AVSS_33	AB15	VSS_54	J17
AVSS_34	AB17	VSS_55	J18
HDMI_TX_HPDIN	AB18	VSS_56	J20
I2C1_SDA/CAN0_RX_M0/PCIE20_BUTTONRSTn/MCU_JTAG_TCK/GPIO0_B4_u	AB20	VCCIO4	J21
I2C0_SDA/GPIO0_B2_u	AB21	VSS_57	J22
GPIO0_D4_d	AB23	SDMMC0_D3/ARMJTAG_TMS/UART5_RTSn_M0/GPIO2_A0_u	J23
TVSS	AB24	SDMMC0_D1/UART2_RX_M1/UART6_RX_M1/PWM9_M1/GPIO1_D6_u	J24
PCIE30_TX1N	AB27	SDMMC0_D0/UART2_TX_M1/UART6_TX_M1/PWM8_M1/GPIO1_D5_u	J25
PCIE30_TX1P	AB28	VSS_58	J26
CIF_D5/EBC_SDDO5/SDMMC2_CLK_M0/I2S1_SDI1_M1/VOP_BT656_D5_M1/GPIO3_D3_d	AC1	AVSS_1	J27
PWM15_IR_M0/SPDIF_TX_M1/GMAC1_MDIO_M0/UART7_RX_M1/I2S1_LRCK_RX_M2/GPIO3_C5_d	AC2	EDP_TX_D0P	J28
PWM14_M0/VOP_PWM_M1/GMAC1_MDC_M0/UART7_TX_M1/PDM_CLK1_M2/GPIO3_C4_d	AC3	VSS_59	K1
LCDC_DEN/VOP_BT1120_D15/SPI1_CLK_M1/UART5_RX_M1/I2S1_SCLK_RX_M2/GPIO3_C3_d	AC4	DDR_DQ12_A/DDR4_DQU2_A/LPDDR4_DQ12_A/DDR3_DQ12/LPDDR3_DQ26	K2
CIF_D0/EBC_SDDO0/SDMMC2_D0_M0/I2S1_MCLK_M1/VOP_BT656_D0_M1/GPIO3_C6_d	AC5	DDRPHY_VDDQL_4	K10
LCDC_D3/VOP_BT656_D3_M0/SPI0_CLK_M1/PCIE30X1_WAKEn_M1/I2S1_SDI0_M2/GPIO2_D3_d	AC7	VSS_60	K11
LCDC_D2/VOP_BT656_D2_M0/SPI0_CS0_M1/PCIE30X1_CLKREQn_M1/I2S1_LRCK_TX_M2/GPIO2_D2_d	AC8	VSS_61	K12
AVSS_35	AC9	VSS_62	K13
AVSS_36	AC11	VSS_63	K14
AVSS_37	AC12	VDD_CPU_2	K15
MIPI_DSI_TX1_D2N/LVDS_TX1_D2N	AC14	VDD_CPU_3	K16
AVSS_38	AC15	VDD_CPU_4	K17
MIPI_DSI_TX1_D1N/LVDS_TX1_D1N	AC17	VDD_CPU_5	K18
AVSS_39	AC18	VSS_64	K19
UART2_RX_M0/GPIO0_D0_u	AC20	EDP_TX_D0N	K27
PWM6/SPI0_MISO_M0/PCIE30X2_WAKEn_M0/GPIO0_C5_d	AC21	EDP_TX_D1P	K28
I2C2_SCL_M0/SPI0_CLK_M0/PCIE20_WAKEn_M0/PWM1_M1/GPIO0_B5_u	AC22	DDR_DQS1N_A/DDR4_DQSU_N_A/LPDDR4_DQS1N_A/DDR3_DQS1N/LPDDR3_DQS3N	L1
GPIO0_D6_d	AC24	DDR_DQS1P_A/DDR4_DQSU_P_A/LPDDR4_DQS1P_A/DDR3_DQS1P/LPDDR3_DQS3P	L2
AVSS_40	AC25	VSS_65	L3
AVSS_41	AC26	DDR_DQ15_A/DDR4_DQU0_A/LPDDR4_DQ15_A/DDR3_DQ15/LPDDR3_DQ27	L4

Rockchip Confidential

Pin Name	Pin	Pin Name	Pin
PCIE30_RX0N	AC27	VSS_66	L5
PCIE30_RX0P	AC28	DDR_DQ11_A/DDR4_DQU5_A/LPDDR4_DQ11_A/DDR3_DQ11/LPDDR3_DQ29	L6
LCDC_HSYNC/VOP_BT1120_D13/SPI1_MOSI_M1/PCIE20_PERSTn_M1/I2S1_SDO2_M2/GPIO3_C1_d	AD1	DDR_DQ10_A/DDR4_DQU7_A/LPDDR4_DQ10_A/DDR3_DQ10/LPDDR3_DQ28	L7
LCDC_D23/PWM13_M0/GMAC1_MCLKINOUT_M0/UART3_RX_M1/PDM_SDI3_M2/GPIO3_C0_d	AD2	VSS_67	L8
VSS_138	AD3	DDRPHY_VDDQ_7	L9
LCDC_D22/PWM12_M0/GMAC1_TXEN_M0/UART3_TX_M1/PDM_SDI2_M2/GPIO3_B7_d	AD4	DDRPHY_VDDQL_5	L10
LCDC_D6/VOP_BT656_D6_M0/SPI2_MOSI_M1/PCIE30X2_PERSTn_M1/I2S1_SDI3_M2/GPIO2_D6_d	AD6	VSS_68	L11
LCDC_D1/VOP_BT656_D1_M0/SPI0_MOSI_M1/PCIE20_WAKEn_M1/I2S1_SCLK_TX_M2/GPIO2_D1_d	AD7	VDD_LOGIC_1	L12
PWM12_M1/SPI3_MISO_M1/SATA1_ACT_LED/UART9_TX_M1/I2S3_SDO_M1/GPIO4_C5_d	AD8	VSS_69	L13
MIPI_CSI_RX_D3P	AD9	VSS_70	L14
MIPI_CSI_RX_D2N	AD11	VDD_CPU_6	L15
MIPI_DSI_TX1_D3P/LVDS_TX1_D3P	AD12	VDD_CPU_7	L16
MIPI_DSI_TX1_D2P/LVDS_TX1_D2P	AD14	VDD_CPU_8	L17
MIPI_DSI_TX1_CLKP/LVDS_TX1_CLKP	AD15	VDD_CPU_9	L18
MIPI_DSI_TX1_D1P/LVDS_TX1_D1P	AD17	VSS_71	L19
MIPI_DSI_TX1_D0P/LVDS_TX1_D0P	AD18	VSS_72	L20
PWM7_IR/SPI0_CS0_M0/PCIE30X2_PERSTn_M0/GPIO0_C6_d	AD20	VSS_73	L21
PWM5/SPI0_CS1_M0/UART0_RTSn/GPIO0_C4_d	AD21	VCCIO3	L22
PWM1_M0/GPUAVS/UART0_RX/GPIO0_C0_d	AD22	USB3_OTG0_ID	L23
CLK32K_IN/CLK32K_OUT0/PCIE30X2_BUTTONRSTn/GPIO0_B0_u	AD23	AVSS_2	L24
GPIO0_D5_d	AD25	EDP_TX_AUXP	L25
AVSS_42	AD26	AVSS_3	L26
PCIE30_RX1N	AD27	EDP_TX_D1N	L27
PCIE30_RX1P	AD28	EDP_TX_D2P	L28
LCDC_D19/VOP_BT1120_D10/GMAC1_RXER_M0/I2C5_SDA_M0/PDM_SDI1_M2/GPIO3_B4_d	AE1	DDR_DQ8_A/DDR4_DQU3_A/LPDDR4_DQ8_A/DDR3_DQ8/LPDDR3_DQ25	M1
LCDC_D20/VOP_BT1120_D11/GMAC1_TXD0_M0/I2C3_SCL_M1/PWM10_M0/GPIO3_B5_d	AE2	VSS_74	M2
LCDC_D21/VOP_BT1120_D12/GMAC1_TXD1_M0/I2C3_SDA_M1/PWM11_IR_M0/GPIO3_B6_d	AE3	VSS_75	M3
LCDC_D9/VOP_BT1120_D1/GMAC1_TXD2_M0/I2S3_MCLK_M0/SDMMC2_D1_M1/GPIO3_A2_d	AE5	DDR_ECC_DQ1	M4
VSS_139	AE6	DDR_ECC_DQ2	M5
PWM13_M1/SPI3_CS0_M1/SATA0_ACT_LED/UART9_RX_M1/I2S3_SDI_M1/GPIO4_C6_d	AE8	VSS_76	M6
MIPI_CSI_RX_D3N	AE9	DDR_ECC_DQ4	M7
MIPI_CSI_RX_D2P	AE11	VSS_77	M8
MIPI_DSI_TX1_D3N/LVDS_TX1_D3N	AE12	DDRPHY_VDDQ_8	M9
AVSS_43	AE14	DDRPHY_VDDQL_6	M10
MIPI_DSI_TX1_CLKN/LVDS_TX1_CLKN	AE15	VSS_78	M11
AVSS_44	AE17	VDD_LOGIC_2	M12
MIPI_DSI_TX1_D0N/LVDS_TX1_D0N	AE18	VSS_79	M13
AVSS_45	AE20	VSS_80	M14
VSS_140	AE21	VDD_CPU_COM	M15
PWM4/VOP_PWM_M0/PCIE30X1_PERSTn_M0/MCU_JTAG_TRSTn/GPIO0_C3_d	AE23	VSS_81	M16
GPU_PWREN/SATA_CP_POD/PCIE30X2_CLKREQn_M0/GPIO0_A6_d	AE24	VDD_CPU_10	M17
GPIO0_D3_d	AE26	VSS_82	M18
AVSS_46	AE27	VDD_NPU_1	M19
AVSS_47	AE28	EDP_TX_AVDD_0V9	M20
LCDC_D18/VOP_BT1120_D9/GMAC1_RXDV_CRS_M0/I2C5_SCL_M0/PDM_SDI0_M2/GPIO3_B3_d	AF1	AVSS_4	M21
LCDC_D17/VOP_BT1120_D8/GMAC1_RXD1_M0/UART4_TX_M1/PWM9_M0/GPIO3_B2_d	AF2	EDP_TX_AVDD_1V8	M22
VSS_141	AF3	USB3_AVDD_3V3	M23
LCDC_D11/VOP_BT1120_D3/GMAC1_RXD2_M0/I2S3_LRCK_M0/SDMMC2_D3_M1/GPIO3_A4_d	AF4	USB3_OTG0_VBUSDET	M24
LCDC_D4/VOP_BT656_D4_M0/SPI2_CS1_M1/PCIE30X2_CLKREQn_M1/I2S1_SDI1_M2/GPIO2_D4_d	AF5	EDP_TX_AUXN	M25
LCDC_D5/VOP_BT656_D5_M0/SPI2_CS0_M1/PCIE30X2_WAKEn_M1/I2S1_SDI2_M2/GPIO2_D5_d	AF6	AVSS_5	M26

Rockchip Confidential

Pin Name	Pin	Pin Name	Pin
PWM14_M1/SPI3_CLK_M1/CAN1_RX_M1/PCIE30X2_CLKREQn_M2/I2S3_MCLK_M1/GPIO4_C2_d	AF8	EDP_TX_D2N	M27
AVSS_48	AF9	EDP_TX_D3P	M28
AVSS_49	AF11	VSS_83	N1
AVSS_50	AF12	DDR_DQ9_A/DDR4_DQU1_A/LPDDR4_DQ9_A/DDR3_DQ9/LPDDR3_DQ24	N2
AVSS_51	AF14	SYSPLL_AVDD_1V8	N10
AVSS_52	AF15	SYSPLL_AVSS	N11
AVSS_53	AF17	VSS_84	N12
AVSS_54	AF18	VDD_LOGIC_3	N13
AVSS_55	AF20	VSS_85	N14
AVSS_56	AF21	VSS_86	N15
PWM2_M0/NPUAVS/UART0_TX/MCU_JTAG_TDI/GPIO0_C1_d	AF23	VDD_LOGIC_4	N16
I2C0_SCL/GPIO0_B1_u	AF24	VSS_87	N17
SDMMC0_PWREN/SATA_MP_SWITCH/PCIE20_CLKREQn_M0/GPIO0_A5_d	AF25	VSS_88	N18
VSS_142	AF26	VDD_NPU_2	N19
XOUT24M	AF27	EDP_TX_D3N	N27
XIN24M	AF28	AVSS_6	N28
LCDC_D16/VOP_BT1120_D7/GMAC1_RXD0_M0/UART4_RX_M1/PWM8_M0/GPIO3_B1_d	AG1	DDR_ECC_DQS_N	P1
LCDC_D15/VOP_BT1120_D6/ETH1_REFCLKO_25M_M0/SDMMC2_PWREN_M1/GPIO3_B0_d	AG2	DDR_ECC_DQS_P	P2
LCDC_D13/VOP_BT1120_CLK/GMAC1_TXCLK_M0/I2S3_SDI_M0/SDMMC2_CLK_M1/GPIO3_A6_d	AG3	VSS_89	P3
LCDC_D10/VOP_BT1120_D2/GMAC1_TXD3_M0/I2S3_SCLK_M0/SDMMC2_D2_M1/GPIO3_A3_d	AG4	DDR_ECC_DQ6	P4
VSS_143	AG5	DDR_ECC_DQ0	P5
LCDC_D0/VOP_BT656_D0_M0/SPI0_MISO_M1/PCIE20_CLKREQn_M1/I2S1_MCLK_M2/GPIO2_D0_d	AG6	VSS_90	P6
HDMITX_SDA/I2C5_SDA_M1/GPIO4_D0_u	AG7	DDR_ECC_DM	P7
HDMITX_SCL/I2C5_SCL_M1/GPIO4_C7_u	AG8	DDR_VREFOUT	P8
MIPI_CSI_RX_CLK1P	AG9	USB2_AVDD_1V8	P9
MIPI_CSI_RX_CLK0P	AG10	USB2_AVDD_3V3	P10
MIPI_CSI_RX_D1P	AG11	SYSPLL_AVDD_0V9	P11
MIPI_CSI_RX_D0P	AG12	VSS_91	P12
MIPI_DSI_TX0_D3N/LVDS_TX0_D3N	AG13	VDD_LOGIC_5	P13
MIPI_DSI_TX0_D2N/LVDS_TX0_D2N	AG14	VSS_92	P14
MIPI_DSI_TX0_CLKN/LVDS_TX0_CLKN	AG15	VSS_93	P15
MIPI_DSI_TX0_D1N/LVDS_TX0_D1N	AG16	VDD_LOGIC_6	P16
MIPI_DSI_TX0_D0N/LVDS_TX0_D0N	AG17	VSS_94	P17
AVSS_57	AG18	VDD_NPU_3	P18
HDMI_TX_CLKN	AG19	VDD_NPU_4	P19
HDMI_TX_D0P	AG20	VDD_NPU_5	P20
HDMI_TX_D1P	AG21	AVSS_7	P21
HDMI_TX_D2P	AG22	USB3_AVDD_0V9	P22
PWM3_IR/EDP_HPDIN_M1/PCIE30X1_WAKEn_M0/MCU_JTAG_TMS/GPIO0_C2_d	AG23	USB3_AVDD_1V8	P23
I2C1_SCL/CAN0_TX_M0/PCIE30X1_BUTTONRSTn/MCU_JTAG_TDO/GPIO0_B3_u	AG24	USB3_HOST1_DP	P24
FLASH_VOL_SEL/GPIO0_A7_u	AG25	USB3_HOST1_DM	P25
TSADC_SHUT_M0/TSADC_SHUT_ORG/GPIO0_A1_z	AG26	AVSS_8	P26
REFCLK_OUT/GPIO0_A0_d	AG27	USB3_OTG0_DP	P27
PMIC_SLEEP/TSADC_SHUT_M1/GPIO0_A2_d	AG28	USB3_OTG0_DM	P28
VSS_144	AH1	USB2_HOST2_DM	R1
LCDC_D14/VOP_BT1120_D5/GMAC1_RXCLK_M0/SDMMC2_DET_M1/GPIO3_A7_d	AH2	USB2_HOST2_DP	R2
LCDC_D12/VOP_BT1120_D4/GMAC1_RXD3_M0/I2S3_SDO_M0/SDMMC2_CMD_M1/GPIO3_A5_d	AH3	VSS_95	R3
LCDC_CLK/VOP_BT656_CLK_M0/SPI2_CLK_M1/UART8_RX_M1/I2S1_SDO1_M2/GPIO3_A0_d	AH4	DDR_ECC_DQ7	R4
LCDC_D7/VOP_BT656_D7_M0/SPI2_MISO_M1/UART8_TX_M1/I2S1_SDO0_M2/GPIO2_D7_d	AH5	DDR_ECC_DQ3	R5
HDMITX_CEC_M0/SPI3_CS1_M1/GPIO4_D1_u	AH6	VSS_96	R6
EDP_HPDIN_M0/SPDIF_TX_M2/SATA2_ACT_LED/PCIE30X2_PERSTn_M2/I2S3_LRCK_M1/GPIO4_C4_d	AH7	DDR_ECC_DQ5	R7
VSS_145	AH8	USB2_AVDD_0V9	R8
MIPI_CSI_RX_CLK1N	AH9	VCCIO6_1	R9
MIPI_CSI_RX_CLK0N	AH10	VSS_97	R10

Rockchip Confidential

Pin Name	Pin	Pin Name	Pin
MIPI_CSI_RX_D1N	AH11	VSS_98	R11
MIPI_CSI_RX_D0N	AH12	VDD_LOGIC_7	R12
MIPI_DSI_TX0_D3P/LVDS_TX0_D3P	AH13	VDD_GPU_1	R13
MIPI_DSI_TX0_D2P/LVDS_TX0_D2P	AH14	VSS_99	R14
MIPI_DSI_TX0_CLKP/LVDS_TX0_CLKP	AH15	VSS_100	R15
MIPI_DSI_TX0_D1P/LVDS_TX0_D1P	AH16	VDD_LOGIC_8	R16
MIPI_DSI_TX0_D0P/LVDS_TX0_D0P	AH17	VSS_101	R17
AVSS_58	AH18	VSS_102	R18
HDMI_TX_CLKP	AH19	VSS_103	R19
HDMI_TX_D0N	AH20	MULTI_PHY_AVDD_0V9_1	R20
HDMI_TX_D1N	AH21	MULTI_PHY_AVDD_0V9_2	R21
HDMI_TX_D2N	AH22	MULTI_PHY_AVDD_1V8	R22
AVSS_59	AH23	AVSS_9	R23
UART2_TX_M0/GPIO0_D1_u	AH24	MULTI_PHY0_REFCLKP	R24
HDMITX_CEC_M1/PWM0_M1/UART0_CTSn/GPIO0_C7_d	AH25	MULTI_PHY0_REFCLKN	R25
PWM0_M0/CPUAVS/GPIO0_B7_d	AH26	AVSS_10	R26
nPOR_u	AH27	USB3_OTG0_SSRXN/SATA0_RXN	R27
VSS_146	AH28	USB3_OTG0_SSRXP/SATA0_RXP	R28
DDR4_A2/LPDDR4_A1_A/DDR3_A4/LPDDR3_A6/AC2	B1	USB2_HOST3_DM	T1
DDR4_CS1n/LPDDR4_CS1n_A/DDR3_CS1n/LPDDR3_ODT1/AC26	B2	USB2_HOST3_DP	T2
DDR4_CKE/LPDDR4_CKE0_A/DDR3_CKE/LPDDR3_CKE/AC22	B3	VSS_104	T10
DDR4_CLKP/LPDDR4_CLKP_A/DDR3_CLKP/LPDDR3_CLKP/AC23	B4	VSS_105	T11
VSS_8	B5	VDD_LOGIC_9	T12
DDR4_A0/LPDDR4_CLKP_B/DDR3_A9/-/AC0	B6	VDD_GPU_2	T13
DDR4_A5/LPDDR4_A5_B/DDR3_A11/LPDDR3_A2/AC5	B7	VSS_106	T14
DDR4_A13/LPDDR4_A0_B/DDR3_A14/LPDDR3_A0/AC13	B8	VSS_107	T15
VSS_9	B9	VDD_LOGIC_10	T16
DDR_DQ0_B/DDR4_DQU7_B/LPDDR4_DQ0_B/DDR3_DQ16/LPDDR3_DQ1	B10	VSS_108	T17
DDR_DQS0N_B/DDR4_DQSU_N_B/LPDDR4_DQS0N_B/DDR3_DQS2N/LPDDR3_DQS0N	B11	VSS_109	T18
VSS_10	B12	VSS_110	T19
DDR_DQ12_B/DDR4_DQL7_B/LPDDR4_DQ12_B/DDR3_DQ28/LPDDR3_DQ16	B13	USB3_OTG0_SSTXN/SATA0_TXN	T27
DDR_DQ15_B/DDR4_DQL3_B/LPDDR4_DQ15_B/DDR3_DQ31/LPDDR3_DQ21	B14	USB3_OTG0_SSTXP/SATA0_TXP	T28
DDR_DQS1P_B/DDR4_DQSL_P_B/LPDDR4_DQS1P_B/DDR3_DQS3P/LPDDR3_DQS2P	B15	VSS_111	U1
VSS_11	B16	CIF_CLKIN/EBC_SDCLK/GMAC1_MCLKINOUT_M1/UART1_CTSn_M1/I2S2_SCLK_RX_M1/GPIO4_C1_d	U2
DDR_DQ9_B/DDR4_DQL2_B/LPDDR4_DQ9_B/DDR3_DQ25/LPDDR3_DQ19	B17	CIF_CLKOUT/EBC_GDCLK/PWM11_IR_M1/GPIO4_C0_d	U3
DDR_DQ11_B/DDR4_DQL6_B/LPDDR4_DQ11_B/DDR3_DQ27/LPDDR3_DQ23	B18	CIF_VSYNC/EBC_SDOE/GMAC1_MDIO_M1/I2S2_SCLK_TX_M1/GPIO4_B7_d	U4
I2S1_SCLK_TX_M0/UART3_CTSn_M0/SCR_IO/PCIE30X1_WAKEn_M2/ACODEC_DAC_CLK/GPIO1_A3_d	B19	CIF_HREF/EBC_SDLE/GMAC1_MDC_M1/UART1_RTSn_M1/I2S2_MCLK_M1/GPIO4_B6_d	U5
I2S1_SDO0_M0/UART4_CTSn_M0/SCR_DET/AUDIOPWM_ROUT_N/ACODEC_DAC_DATAL/GPIO1_A7_d	B20	VSS_112	U6
I2S1_SDI0_M0/PDM_SDI0_M0/GPIO1_B3_d	B21	VSS_113	U7
EMMC_CMD/FLASH_WRn/GPIO1_C4_u	B22	VSS_114	U8
VSS_12	B23	VCCIO6_2	U9
EMMC_D2/FLASH_D2/GPIO1_B6_u	B24	VSS_115	U10
EMMC_D7/FLASH_D7/GPIO1_C3_u	B25	VDD_GPU_3	U11
VSS_13	B26	VDD_GPU_4	U12
SARADC_VIN0	B27	VDD_GPU_5	U13
SDMMC1_D2/GMAC0_RXCLK/UART7_RX_M0/GPIO2_A5_u	B28	VSS_116	U14
DDR4_A8/LPDDR4_ODT0_CA_A/DDR3_A6/LPDDR3_A9/AC8	C1	VSS_117	U15
DDR4_A11/LPDDR4_A0_A/DDR3_A7/LPDDR3_A8/AC11	C2	VSS_118	U16
VSS_14	C3	VSS_119	U17
DDR4_A12/LPDDR4_A3_A/DDR3_BA2/-/AC12	C4	VSS_120	U18
DDR4_A14_WEn/LPDDR4_A4_A/DDR3_A15/LPDDR3_A5/AC14	C5	PCIE30_RESREF	U19
VSS_15	C6	PCIE30_AVDD_0V9_2	U20

Rockchip Confidential

Pin Name	Pin	Pin Name	Pin
VSS_16	C8	PCIE30_AVDD_0V9_1	U21
VSS_17	C9	PCIE30_AVDD_1V8	U22
VSS_18	C11	AVSS_11	U23
VSS_19	C12	MULTI_PHY1_REFCLKN	U24
VSS_20	C14	MULTI_PHY1_REFCLKP	U25
VSS_21	C15	AVSS_12	U26
VSS_22	C17	USB3_HOST1_SSRXN/SATA1_RXN/QSGMII_RXN_M0	U27
VSS_23	C18	USB3_HOST1_SSRXP/SATA1_RXP/QSGMII_RXP_M0	U28
I2S1_LRCK_RX_M0/UART4_TX_M0/PDM_CLK0_M0/AUDIOPWM_ROUT_P/GPIO1_A6_d	C20	I2C4_SCL_M0/EBC_GDOE/ETH1_REFCLKO_25M_M1/SPI3_CLK_M0/I2S2_SDO_M1/GPIO4_B3_d	V1
EMMC_D1/FLASH_D1/GPIO1_B5_u	C21	ISP_PRELIGHT_TRIG/EBC_SDCE3/GMAC1_RXDV_CRS_M1/I2S1_SDO2_M1/GPIO4_B1_d	V2
FSPI_CS0n/FLASH_CS0n/GPIO1_D3_u	C23	VSS_121	V3
FSPI_D0/FLASH_RDY/GPIO1_D1_u	C24	I2C4_SDA_M0/EBC_VCOM/GMAC1_RXER_M1/SPI3_MOSI_M0/I2S2_SDI_M1/GPIO4_B2_d	V4
VSS_24	C25	I2C2_SCL_M1/EBC_SDSHR/CAN2_TX_M0/I2S1_SDO3_M1/GPIO4_B5_d	V5
SARADC_VIN1	C26	I2C2_SDA_M1/EBC_GDSP/CAN2_RX_M0/ISP_FLASH_TRIGIN/VOP_BT656_CLK_M1/GPIO4_B4_d	V6
SDMMC1_D3/GMAC0_TXD2/UART7_TX_M0/GPIO2_A6_u	C27	CAM_CLKOUT1/EBC_SDCE2/GMAC1_RXD1_M1/SPI3_MISO_M0/I2S1_SDO1_M1/GPIO4_B0_d	V7
SDMMC1_CMD/GMAC0_TXD3/UART9_RX_M0/GPIO2_A7_u	C28	VSS_122	V8
DDR_DQ3_A/DDR4_DQL6_A/LPDDR4_DQ3_A/DDR3_DQ3/LPDDR3_DQ9	D1	VSS_123	V9
VSS_25	D2	VCCIO5_1	V10
VSS_26	D3	VCCIO5_2	V11
DDR4_A16_RASn/LPDDR4_A5_A/DDR3_RASn/LPDDR3_A7/AC16	D5	VCCIO7	V12
DDR4_A10/LPDDR4_CKE0_B/DDR3_A10/-/AC10	D6	VSS_124	V13
DDR4_ODT1/LPDDR4_CS0n_B/DDR3_CS0n/LPDDR3_CS0n/AC28	D8	AVSS_13	V14
DDR4_A4/LPDDR4_A3_B/DDR3_BA1/LPDDR3_A3/AC4	D9	AVSS_14	V15
VSS_27	D11	AVSS_15	V16
DDR_DQ2_B/DDR4_DQU3_B/LPDDR4_DQ2_B/DDR3_DQ18/LPDDR3_DQ6	D12	HDMI_TX_AVDD_0V9_1	V17
DDR_DM0_B/DDR4_DMU_B/LPDDR4_DM0_B/DDR3_DM2/LPDDR3_DM0	D14	HDMI_TX_AVDD_0V9_2	V18
DDR_DQ5_B/DDR4_DQU6_B/LPDDR4_DQ5_B/DDR3_DQ21/LPDDR3_DQ3	D15	PMU_VDD_LOGIC_0V9	V19
DDR_DQ14_B/DDR4_DQL1_B/LPDDR4_DQ14_B/DDR3_DQ30/LPDDR3_DQ20	D17	PMUPLL_AVSS	V20
I2C3_SDA_M0/UART3_RX_M0/CAN1_RX_M0/AUDIOPWM_LOUT_P/ACODEC_ADC_DATA/GPIO1_A0_u	D18	PMUPLL_AVDD_0V9	V21
I2S1_SDO1_M0/I2S1_SDI3_M0/PDM_SDI3_M0/PCIE20_CLKREQn_M2/ACODEC_DAC_DATAR/GPIO1_B0_d	D20	AVSS_16	V22
EMMC_D3/FLASH_D3/GPIO1_B7_u	D21	AVSS_17	V23
FSPI_D1/FLASH_RDn/GPIO1_D2_u	D23	PCIE20_REFCLKP	V24
SARADC_VIN2	D24	PCIE20_REFCLKN	V25
SDMMC1_PWREN/I2C4_SDA_M1/UART8_RTSn_M0/CAN2_RX_M1/GPIO2_B1_d	D26	AVSS_18	V26
SDMMC1_CLK/GMAC0_TXCLK/UART9_TX_M0/GPIO2_B0_d	D27	USB3_HOST1_SSTXN/SATA1_TXN/QSGMII_TXN_M0	V27
VSS_28	D28	USB3_HOST1_SSTXP/SATA1_TXP/QSGMII_TXP_M0	V28
DDR_DQ1_A/DDR4_DQL2_A/LPDDR4_DQ1_A/DDR3_DQ1/LPDDR3_DQ14	E1	CAM_CLKOUT0/EBC_SDCE1/GMAC1_RXD0_M1/SPI3_CS1_M0/I2S1_LRCK_RX_M1/GPIO4_A7_d	W1
DDR_DQ2_A/DDR4_DQL4_A/LPDDR4_DQ2_A/DDR3_DQ2/LPDDR3_DQ10	E2	ISP_FLASHTRIGOUT/EBC_SDCE0/GMAC1_TXEN_M1/SPI3_CS0_M0/I2S1_SCLK_RX_M1/GPIO4_A6_d	W2
VSS_29	E3	VSS_125	W10
DDR4_A15_CASn/LPDDR4_A2_A/DDR3_A0/-/AC15	E4	VSS_126	W11
DDR4_ACTn/LPDDR4_CKE1_B/DDR3_CASn/-/AC17	E6	VSS_127	W12
VSS_30	E7	VSS_128	W13
DDR4_ODT0/LPDDR4_CS1n_B/DDR3_ODT0/LPDDR3_CS1n/AC27	E8	MIPI_CSI_RX_AVDD_0V9	W14
DDR4_BA1/LPDDR4_A4_B/DDR3_A12/LPDDR3_A4/AC19	E9	MIPI_DSI_TX1//LVDS_TX1_AVDD_0V9	W15
DDR4_BA0/LPDDR4_A2_B/DDR3_A1/-/AC18	E11	MIPI_DSI_TX0/LVDS_TX0_AVDD_0V9	W16
DDR_DQ3_B/DDR4_DQU1_B/LPDDR4_DQ3_B/DDR3_DQ19/LPDDR3_DQ4	E12	AVSS_19	W17

Rockchip Confidential

Pin Name	Pin	Pin Name	Pin
DDR_DQ7_B/DDR4_DQU2_B/LPDDR4_DQ7_B/DDR3_DQ23/LPDDR3_DQ0	E14	HDMI_TX_AVDD_1V8	W18
DDR_DQ6_B/DDR4_DQU4_B/LPDDR4_DQ6_B/DDR3_DQ22/LPDDR3_DQ7	E15	PMUIO2	W19
DDR_DM1_B/DDR4_DML_B/LPDDR4_DM1_B/DDR3_DM3/LPDDR3_DM2	E17	PCIE20_TXP/SATA2_TXP/QSGMII_TXP_M1	W27
I2C3_SCL_M0/UART3_TX_M0/CAN1_TX_M0/AUDIOPWM_LOUT_N/ACODEC_ADC_CLK/GPIO1_A1_u	E18	PCIE20_TXN/SATA2_TXN/QSGMII_TXN_M1	W28
I2S1_SDO2_M0/I2S1_SDI2_M0/PDM_SDI2_M0/PCIE20_WAKEn_M2/ACODEC_ADC_SYNC/GPIO1_B1_d	E20	CIF_D15/EBC_SDDO15/GMAC1_TXD1_M1/UART9_RX_M2/I2S2_LRCK_RX_M1/GPIO4_A5_d	Y1
EMMC_D5/FLASH_D5/GPIO1_C1_u	E21	CIF_D14/EBC_SDDO14/GMAC1_TXD0_M1/UART9_TX_M2/I2S2_LRCK_TX_M1/GPIO4_A4_d	Y2
EMMC_D6/FLASH_D6/GPIO1_C2_u	E22	CIF_D13/EBC_SDDO13/GMAC1_RXCLK_M1/UART7_RX_M2/PDM_SDI3_M1/GPIO4_A3_d	Y3
SARADC_VIN3	E23	CIF_D12/EBC_SDDO12/GMAC1_RXD3_M1/UART7_TX_M2/PDM_SDI2_M1/GPIO4_A2_d	Y4
SDMMC1_DET/I2C4_SCL_M1/UART8_CTSn_M0/CAN2_TX_M1/GPIO2_B2_u	E25	CIF_D9/EBC_SDDO9/GMAC1_TXD3_M1/UART1_RX_M1/PDM_SDI0_M1/GPIO3_D7_d	Y5
CLK32K_OUT1/UART8_RX_M0/SPI1_CS1_M0/GPIO2_C6_d	E26	CIF_D8/EBC_SDDO8/GMAC1_TXD2_M1/UART1_TX_M1/PDM_CLK0_M1/GPIO3_D6_d	Y6
SDMMC1_D0/GMAC0_RXD2/UART6_RX_M0/GPIO2_A3_u	E27	CIF_D4/EBC_SDDO4/SDMMC2_CMD_M0/I2S1_SDI0_M1/VOP_BT656_D4_M1/GPIO3_D2_d	Y7
SDMMC1_D1/GMAC0_RXD3/UART6_TX_M0/GPIO2_A4_u	E28	VSS_129	Y8
VSS_31	F1	VSS_130	Y9
DDR_DQ0_A/DDR4_DQL0_A/LPDDR4_DQ0_A/DDR3_DQ0/LPDDR3_DQ15	F2	VSS_131	Y11
VSS_32	F3	VSS_132	Y12
DDR4_A3/LPDDR4_CKE1_A/DDR3_A3/-/AC3	F4	MIPI_CSI_RX_AVDD_1V8	Y14
DDR4_A1/-/DDR3_A2/-/AC1	F5	MIPI_DSI_TX1/LVDS_TX1_AVDD_1V8	Y15
DDR4_BG1/LPDDR4_ODT1_CA_A/DDR3_BA0/-/AC21	F7	MIPI_DSI_TX0/LVDS_TX0_AVDD_1V8	Y17
DDR4_BG0/LPDDR4_ODT1_CA_B/DDR3_WEn/-/AC20	F8	AVSS_20	Y18
VSS_33	F9	PMUIO1	Y20
DDR4_RESETn/LPDDR4_RESETn/DDR3_RESETn/AC29	F11	PMUPLL_AVDD_1V8	Y21
VSS_34	F12	SDMMC0_DET/SATA_CP_DET/PCIE30X1_CLKREQn_M0/GPIO0_A4_u	Y22
VSS_35	F14	AVSS_21	Y23
VSS_36	F15	AVSS_22	Y24
VSS_37	F17	PCIE30_REFCLKP_IN	Y25
I2S1_SCLK_RX_M0/UART4_RX_M0/PDM_CLK1_M0/SPDIF_TX_M0/GPIO1_A4_d	F18	AVSS_23	Y26
EMMC_RSTn/FSPI_D2/FLASH_WPn/GPIO1_C7_d	F20	PCIE20_RXP/SATA2_RXP/QSGMII_RXP_M1	Y27
SARADC_VIN7	F21	PCIE20_RXN/SATA2_RXN/QSGMII_RXN_M1	Y28

2.7 Power/Ground IO Description

Table 2-2 Power/Ground IO information

Group	Ball#	Descriptions
VSS	A1 A3 A6 A10 A14 A18 A28 AA4 AA9 AA23 AB2 AB6 AD3 AE6 AE21 AF3 AF26 AG5 AH1 AH8 AH28 B5 B9 B12 B16 B23 B26 C3 C6 C8 C9 C11 C12 C14 C15 C17 C18 C25 D2 D3 D11 D28 E3 E7 F1 F3 F9 F12 F14 F15 F17 G5 G6 G8 G9 G11 G12 G14 G15 G17 G18 G24 H2 H3 H6 J3 J5 J17 J18 J20 J22 J26 K1 K11 K12 K13 K14 K19 L3 L5 L8 L11 L13 L14 L19 L20 L21 M2 M3 M6 M8 M11 M13 M14 M16 M18 N1 N12 N14 N15 N17 N18 P3 P6 P12 P14 P15 P17 R3 R6 R10 R11 R14 R15 R17 R18 R19 T10 T11 T14 T15 T17 T18 T19 U1 U6 U7 U8 U10 U14 U15 U16	Internal Core Ground, Digital IO Ground,

Rockchip Confidential

Group	Ball#	Descriptions
	U17 U18 V3 V8 V9 V13 W10 W11 W12 W13 Y8 Y9 Y11 Y12	
AVSS	AA12 AA14 AA15 AA17 AA24 AA26 AB11 AB12 AB14 AB15 AB17 AC9 AC11 AC12 AC15 AC18 AC25 AC26 AD26 AE14 AE17 AE20 AE27 AE28 AF9 AF11 AF12 AF14 AF15 AF17 AF18 AF20 AF21 AG18 AH18 AH23 J27 L24 L26 M21 M26 N28 P21 P26 R23 R26 U23 U26 V14 V15 V16 V22 V23 V26 W17 Y18 Y23 Y24 Y26	Analog Ground
DDR_AVSS	J8	Analog Ground
PMUPLL_VSS	V20	Analog Ground
SYSPLL_VSS	N11	Analog Ground
VDD_CPU	J15 K15 K16 K17 K18 L15 L16 L17 L18 M17	CPU Core Power
VDD_CPU_CORE	M15	CPU Core Power feedback
VDD_GPU	R13 T13 U11 U12 U13	GPU Core Power
VDD_NPU	M19 N19 P18 P19 P20	NPU Core Power
VDD_LOGIC	L12 M12 N13 N16 P13 P16 R12 R16 T12 T16	Logic Power
PMU_VDD_LOGIC_0V9	V19	PMU digital Power
VCCIO1	H17	VCCIO1 Power Domain Power
VCCIO2	H18	VCCIO2 Power Domain Power
VCCIO3	L22	VCCIO3 Power Domain Power
VCCIO4	J21	VCCIO4 Power Domain Power
VCCIO5	V10	VCCIO5 Power Domain Power
VCCIO6	V11	VCCIO6 Power Domain Power
VCCIO7	R9	VCCIO7 Power Domain Power
PMUIO1	Y20	PMU VCCIO1 Power Domain Power
PMUIO2	W19	PMU VCCIO2 Power Domain Power
DDRPHY _VDDQ	H9 H11 H12 H14 H15 J9 L9 M9	DDR PHY Power
DDRPHY_VDDQL	J11 J12 J14 K10 L10 M10	DDR PHY Power
PMUPLL_AVDD_0V9	V21	PLL Analog Power
PMUPLL_AVDD_1V8	Y21	PLL Analog Power
SYSPLL_AVDD_0V9	P11	PLL Analog Power
SYSPLL_AVDD_1V8	N10	PLL Analog Power
USB2_AVDD_0V9	R8	USB2.0 analog Power

Rockchip Confidential

Group	Ball#	Descriptions
USB2_AVDD_1V8	P9	USB2.0 analog Power
USB2_AVDD_3V3	P10	USB2.0 analog Power
USB3_AVDD_0V9	P22	USB3.0 analog Power
USB3_AVDD_1V8	P23	USB3.0 analog Power
USB3_AVDD_3V3	M23	USB3.0 analog Power
MULTI_PHY_AVDD_0V9	R20 R21	Multi-Phy analog Power
MULTI_PHY_AVDD_1V8	R22	Multi-Phy analog Power
PCIE30_AVDD_0V9	U21	PCIe3.0 analog Power
PCIE30_AVDD_1V8	U22	PCIe3.0 analog Power
MIPI_CSI_RX_AVDD_0V9	W14	MIPI CSI RX Analog Power
MIPI_CSI_RX_AVDD_1V8	Y14	MIPI CSI RX Analog Power
MIPI_DSI_TX0/LVDS_TX0_AVDD_0V9	W16	MIPI DSI TX0 Analog Power
MIPI_DSI_TX0/LVDS_TX0_AVDD_1V8	Y17	MIPI DSI TX0 Analog Power
MIPI_DSI_TX1/LVDS_TX1_AVDD_0V9	W15	MIPI DSI TX1 Analog Power
MIPI_DSI_TX1/LVDS_TX1_AVDD_1V8	Y15	MIPI DSI TX1 Analog Power
EDP_TX_AVDD_0V9	M20	EDP Analog Power
EDP_TX_AVDD_1V8	M22	EDP Analog Power
HDMI_TX_AVDD_0V9	V17 V18	HDMI PHY analog Power
HDMI_TX_AVDD_1V8	W18	HDMI PHY analog Power
SARADC_AVDD_1V8	H22	SARADC Analog Power
OTP_VCC_1V8	H20	OTP Analog Power

Rockchip Confidential

2.8 Function IO Description

Table 2-3 Function IO description

PIN	PIN Name	Func1	Func2	Func3	Func4	Func5	Func6	Die Power Domain
AF28	XIN24M	XIN24M						PMUIO0
AF27	XOUT24M	XOUT24M						
AE26	GPIO0_D3_d	GPIO0_D3_d						
AB23	GPIO0_D4_d	GPIO0_D4_d						
AD25	GPIO0_D5_d	GPIO0_D5_d						
AC24	GPIO0_D6_d	GPIO0_D6_d						
AB24	TVSS	TVSS						
AH27	nPOR_u	nPOR_u						PMUIO1
AG27	REFCLK_OUT/GPIO0_A0_d	GPIO0_A0_d	REFCLK_OUT					
AG26	TSADC_SHUT_M0/TSADC_SHUT_ORG/GPIO0_A1_z	GPIO0_A1_z	TSADC_SHUT_M0	TSADC_SHUT_ORG				
AG28	PMIC_SLEEP/TSADC_SHUT_M1/GPIO0_A2_d	GPIO0_A2_d	PMIC_SLEEP	TSADC_SHUT_M1				
AA22	GPIO0_A3_u	GPIO0_A3_u						
Y22	SDMMC0_DET/SATA_CP_DET/PCIE30X1_CLKREQn_M0/GPIO0_A4_u	GPIO0_A4_u	SDMMC0_DET	SATA_CP_DET	PCIE30X1_CLKREQn_M0			
AF25	SDMMC0_PWREN/SATA_MP_SWITCH/PCIE20_CLKREQn_M0/GPIO0_A5_d	GPIO0_A5_d	SDMMC0_PWREN	SATA_MP_SWITCH	PCIE20_CLKREQn_M0			
AE24	GPU_PWREN/SATA_CP_POD/PCIE30X2_CLKREQn_M0/GPIO0_A6_d	GPIO0_A6_d	GPU_PWREN	SATA_CP_POD	PCIE30X2_CLKREQn_M0			
AG25	FLASH_VOL_SEL/GPIO0_A7_u	GPIO0_A7_u	FLASH_VOL_SEL					
AD23	CLK32K_IN/CLK32K_OUT0/PCIE30X2_BUTTONRSTn/GPIO0_B0_u	GPIO0_B0_u	CLK32K_IN	CLK32K_OUT0	PCIE30X2_BUTTONRSTn			PMUIO2
AF24	I2C0_SCL/GPIO0_B1_u	GPIO0_B1_u	I2C0_SCL					
AB21	I2C0_SDA/GPIO0_B2_u	GPIO0_B2_u	I2C0_SDA					
AG24	I2C1_SCL/CAN0_TX_M0/PCIE30X1_BUTTONRSTn/MCU_JTAG_TDO/GPIO0_B3_u	GPIO0_B3_u	I2C1_SCL	CAN0_TX_M0	PCIE30X1_BUTTONRSTn	MCU_JTAG_TDO		
AB20	I2C1_SDA/CAN0_RX_M0/PCIE20_BUTTONRSTn/MCU_JTAG_TCK/GPIO0_B4_u	GPIO0_B4_u	I2C1_SDA	CAN0_RX_M0	PCIE20_BUTTONRSTn	MCU_JTAG_TCK		
AC22	I2C2_SCL_M0/SPI0_CLK_M0/PCIE20_WAKEn_M0/PWM1_M1/GPIO0_B5_u	GPIO0_B5_u	I2C2_SCL_M0	SPI0_CLK_M0	PCIE20_WAKEn_M0	PWM1_M1		
AA20	I2C2_SDA_M0/SPI0_MOSI_M0/PCIE20_PERSTn_M0/PWM2_M1/GPIO0_B6_u	GPIO0_B6_u	I2C2_SDA_M0	SPI0_MOSI_M0	PCIE20_PERSTn_M0	PWM2_M1		
AH26	PWM0_M0/CPUAVS/GPIO0_B7_d	GPIO0_B7_d	PWM0_M0	CPUAVS				
AD22	PWM1_M0/GPUAVS/UART0_RX/GPIO0_C0_d	GPIO0_C0_d	PWM1_M0	GPUAVS	UART0_RX			
AF23	PWM2_M0/NPUAVS/UART0_TX/MCU_JTAG_TDI/GPIO0_C1_d	GPIO0_C1_d	PWM2_M0	NPUAVS	UART0_TX	MCU_JTAG_TDI		
AG23	PWM3_IR/EDP_HPDIN_M1/PCIE30X1_WAKEn_M0/MCU_JTAG_TMS/GPIO0_C2_d	GPIO0_C2_d	PWM3_IR	EDP_HPDIN_M1	PCIE30X1_WAKEn_M0	MCU_JTAG_TMS		
AE23	PWM4/VOP_PWM_M0/PCIE30X1_PERSTn_M0/MCU_JTAG_TRSTn/GPIO0_C3_d	GPIO0_C3_d	PWM4	VOP_PWM_M0	PCIE30X1_PERSTn_M0	MCU_JTAG_TRSTn		
AD21	PWM5/SPI0_CS1_M0/UART0_RTSn/GPIO0_C4_d	GPIO0_C4_d	PWM5	SPI0_CS1_M0	UART0_RTSn			
AC21	PWM6/SPI0_MISO_M0/PCIE30X2_WAKEn_M0/GPIO0_C5_d	GPIO0_C5_d	PWM6	SPI0_MISO_M0	PCIE30X2_WAKEn_M0			
AD20	PWM7_IR/SPI0_CS0_M0/PCIE30X2_PERSTn_M0/GPIO0_C6_d	GPIO0_C6_d	PWM7_IR	SPI0_CS0_M0	PCIE30X2_PERSTn_M0			
AH25	HDMITX_CEC_M1/PWM0_M1/UART0_CTSn/GPIO0_C7_d	GPIO0_C7_d	HDMITX_CEC_M1	PWM0_M1	UART0_CTSn			
AC20	UART2_RX_M0/GPIO0_D0_u	GPIO0_D0_u	UART2_RX_M0					
AH24	UART2_TX_M0/GPIO0_D1_u	GPIO0_D1_u	UART2_TX_M0					
D18	I2C3_SDA_M0/UART3_RX_M0/CAN1_RX_M0/AUDIOPWM_LOUT_P/ACODEC_ADC_DATA/GPIO1_A0_u	GPIO1_A0_u	I2C3_SDA_M0	UART3_RX_M0	CAN1_RX_M0	AUDIOPWM_LOUT_P	ACODEC_ADC_DATA	VCCIO1

Rockchip Confidential

PIN	PIN Name	Func1	Func2	Func3	Func4	Func5	Func6	Die Power Domain
E18	I2C3_SCL_M0/UART3_TX_M0/CAN1_TX_M0/AUDIOPWM_LOUT_N/ACODEC_ADC_CLK/GPIO1_A1_u	GPIO1_A1_u	I2C3_SCL_M0	UART3_TX_M0	CAN1_TX_M0	AUDIOPWM_LOUT_N	ACODEC_ADC_CLK	
A19	I2S1_MCLK_M0/UART3_RTSn_M0/SCR_CLK/PCIE30X1_PERSTn_M2/GPIO1_A2_d	GPIO1_A2_d	I2S1_MCLK_M0	UART3_RTSn_M0	SCR_CLK	PCIE30X1_PERSTn_M2		
B19	I2S1_SCLK_TX_M0/UART3_CTSn_M0/SCR_IO/PCIE30X1_WAKEn_M2/ACODEC_DAC_CLK/GPIO1_A3_d	GPIO1_A3_d	I2S1_SCLK_TX_M0	UART3_CTSn_M0	SCR_IO	PCIE30X1_WAKEn_M2	ACODEC_DAC_CLK	
F18	I2S1_SCLK_RX_M0/UART4_RX_M0/PDM_CLK1_M0/SPDIF_TX_M0/GPIO1_A4_d	GPIO1_A4_d	I2S1_SCLK_RX_M0	UART4_RX_M0	PDM_CLK1_M0	SPDIF_TX_M0		
A20	I2S1_LRCK_TX_M0/UART4_RTSn_M0/SCR_RST/PCIE30X1_CLKREQn_M2/ACODEC_DAC_SYNC/GPIO1_A5_d	GPIO1_A5_d	I2S1_LRCK_TX_M0	UART4_RTSn_M0	SCR_RST	PCIE30X1_CLKREQn_M2	ACODEC_DAC_SYNC	
C20	I2S1_LRCK_RX_M0/UART4_TX_M0/PDM_CLK0_M0/AUDIOPWM_ROUT_P/GPIO1_A6_d	GPIO1_A6_d	I2S1_LRCK_RX_M0	UART4_TX_M0	PDM_CLK0_M0	AUDIOPWM_ROUT_P		
B20	I2S1_SDO0_M0/UART4_CTSn_M0/SCR_DET/AUDIOPWM_ROUT_N/ACODEC_DAC_DATAL/GPIO1_A7_d	GPIO1_A7_d	I2S1_SDO0_M0	UART4_CTSn_M0	SCR_DET	AUDIOPWM_ROUT_N	ACODEC_DAC_DATAL	
D20	I2S1_SDO1_M0/I2S1_SDI3_M0/PDM_SDI3_M0/PCIE20_CLKREQn_M2/ACODEC_DAC_DATAR/GPIO1_B0_d	GPIO1_B0_d	I2S1_SDO1_M0	I2S1_SDI3_M0	PDM_SDI3_M0	PCIE20_CLKREQn_M2	ACODEC_DAC_DATAR	
E20	I2S1_SDO2_M0/I2S1_SDI2_M0/PDM_SDI2_M0/PCIE20_WAKEn_M2/ACODEC_ADC_SYNC/GPIO1_B1_d	GPIO1_B1_d	I2S1_SDO2_M0	I2S1_SDI2_M0	PDM_SDI2_M0	PCIE20_WAKEn_M2	ACODEC_ADC_SYNC	
A21	I2S1_SDO3_M0/I2S1_SDI1_M0/PDM_SDI1_M0/PCIE20_PERSTn_M2/GPIO1_B2_d	GPIO1_B2_d	I2S1_SDO3_M0	I2S1_SDI1_M0	PDM_SDI1_M0	PCIE20_PERSTn_M2		
B21	I2S1_SDI0_M0/PDM_SDI0_M0/GPIO1_B3_d	GPIO1_B3_d	I2S1_SDI0_M0	PDM_SDI0_M0				
A24	EMMC_D0/FLASH_D0/GPIO1_B4_u	GPIO1_B4_u	EMMC_D0	FLASH_D0				
C21	EMMC_D1/FLASH_D1/GPIO1_B5_u	GPIO1_B5_u	EMMC_D1	FLASH_D1				
B24	EMMC_D2/FLASH_D2/GPIO1_B6_u	GPIO1_B6_u	EMMC_D2	FLASH_D2				
D21	EMMC_D3/FLASH_D3/GPIO1_B7_u	GPIO1_B7_u	EMMC_D3	FLASH_D3				
A25	EMMC_D4/FLASH_D4/GPIO1_C0_u	GPIO1_C0_u	EMMC_D4	FLASH_D4				
E21	EMMC_D5/FLASH_D5/GPIO1_C1_u	GPIO1_C1_u	EMMC_D5	FLASH_D5				
E22	EMMC_D6/FLASH_D6/GPIO1_C2_u	GPIO1_C2_u	EMMC_D6	FLASH_D6				
B25	EMMC_D7/FLASH_D7/GPIO1_C3_u	GPIO1_C3_u	EMMC_D7	FLASH_D7				
B22	EMMC_CMD/FLASH_WRn/GPIO1_C4_u	GPIO1_C4_u	EMMC_CMD	FLASH_WRn				VCCIO2
A23	EMMC_CLKOUT/FLASH_DQS/GPIO1_C5_d	GPIO1_C5_d	EMMC_CLKOUT	FLASH_DQS				
A26	EMMC_DATA_STROBE/FSPI_CS1n/FLASH_CLE/GPIO1_C6_d	GPIO1_C6_d	EMMC_DATA_STROBE	FSPI_CS1n	FLASH_CLE			
F20	EMMC_RSTn/FSPI_D2/FLASH_WPn/GPIO1_C7_d	GPIO1_C7_d	EMMC_RSTn	FSPI_D2	FLASH_WPn			
A22	FSPI_CLK/FLASH_ALE/GPIO1_D0_d	GPIO1_D0_d	FSPI_CLK	FLASH_ALE				
C24	FSPI_D0/FLASH_RDY/GPIO1_D1_u	GPIO1_D1_u	FSPI_D0	FLASH_RDY				
D23	FSPI_D1/FLASH_RDn/GPIO1_D2_u	GPIO1_D2_u	FSPI_D1	FLASH_RDn				
C23	FSPI_CS0n/FLASH_CS0n/GPIO1_D3_u	GPIO1_D3_u	FSPI_CS0n	FLASH_CS0n				
A27	FSPI_D3/FLASH_CS1n/GPIO1_D4_u	GPIO1_D4_u	FSPI_D3	FLASH_CS1n				
J25	SDMMC0_D0/UART2_TX_M1/UART6_TX_M1/PWM8_M1/GPIO1_D5_u	GPIO1_D5_u	SDMMC0_D0	UART2_TX_M1	UART6_TX_M1	PWM8_M1		
J24	SDMMC0_D1/UART2_RX_M1/UART6_RX_M1/PWM9_M1/GPIO1_D6_u	GPIO1_D6_u	SDMMC0_D1	UART2_RX_M1	UART6_RX_M1	PWM9_M1		
H26	SDMMC0_D2/ARMJTAG_TCK/UART5_CTSn_M0/GPIO1_D7_u	GPIO1_D7_u	SDMMC0_D2	ARMJTAG_TCK	UART5_CTSn_M0			
J23	SDMMC0_D3/ARMJTAG_TMS/UART5_RTSn_M0/GPIO2_A0_u	GPIO2_A0_u	SDMMC0_D3	ARMJTAG_TMS	UART5_RTSn_M0			VCCIO3
H27	SDMMC0_CMD/PWM10_M1/UART5_RX_M0/CAN0_TX_M1/GPIO2_A1_u	GPIO2_A1_u	SDMMC0_CMD	PWM10_M1	UART5_RX_M0	CAN0_TX_M1		
H28	SDMMC0_CLK/TEST_CLKOUT/UART5_TX_M0/CAN0_RX_M1/GPIO2_A2_d	GPIO2_A2_d	SDMMC0_CLK	TEST_CLKOUT	UART5_TX_M0	CAN0_RX_M1		
E27	SDMMC1_D0/GMAC0_RXD2/UART6_RX_M0/GPIO2_A3_u	GPIO2_A3_u	SDMMC1_D0	GMAC0_RXD2	UART6_RX_M0			
E28	SDMMC1_D1/GMAC0_RXD3/UART6_TX_M0/GPIO2_A4_u	GPIO2_A4_u	SDMMC1_D1	GMAC0_RXD3	UART6_TX_M0			
B28	SDMMC1_D2/GMAC0_RXCLK/UART7_RX_M0/GPIO2_A5_u	GPIO2_A5_u	SDMMC1_D2	GMAC0_RXCLK	UART7_RX_M0			
C27	SDMMC1_D3/GMAC0_TXD2/UART7_TX_M0/GPIO2_A6_u	GPIO2_A6_u	SDMMC1_D3	GMAC0_TXD2	UART7_TX_M0			
C28	SDMMC1_CMD/GMAC0_TXD3/UART9_RX_M0/GPIO2_A7_u	GPIO2_A7_u	SDMMC1_CMD	GMAC0_TXD3	UART9_RX_M0			VCCIO4
D27	SDMMC1_CLK/GMAC0_TXCLK/UART9_TX_M0/GPIO2_B0_d	GPIO2_B0_d	SDMMC1_CLK	GMAC0_TXCLK	UART9_TX_M0			
D26	SDMMC1_PWREN/I2C4_SDA_M1/UART8_RTSn_M0/CAN2_RX_M1/GPIO2_B1_d	GPIO2_B1_d	SDMMC1_PWREN	I2C4_SDA_M1	UART8_RTSn_M0	CAN2_RX_M1		
E25	SDMMC1_DET/I2C4_SCL_M1/UART8_CTSn_M0/CAN2_TX_M1/GPIO2_B2_u	GPIO2_B2_u	SDMMC1_DET	I2C4_SCL_M1	UART8_CTSn_M0	CAN2_TX_M1		

Rockchip Confidential

PIN	PIN Name	Func1	Func2	Func3	Func4	Func5	Func6	Die Power Domain
F28	GMAC0_TXD0/UART1_RX_M0/GPIO2_B3_u	GPIO2_B3_u	GMAC0_TXD0	UART1_RX_M0				
G27	GMAC0_TXD1/UART1_TX_M0/GPIO2_B4_u	GPIO2_B4_u	GMAC0_TXD1	UART1_TX_M0				
G28	GMAC0_TXEN/UART1_RTSn_M0/SPI1_CLK_M0/GPIO2_B5_u	GPIO2_B5_u	GMAC0_TXEN	UART1_RTSn_M0	SPI1_CLK_M0			
F27	GMAC0_RXD0/UART1_CTSn_M0/SPI1_MISO_M0/GPIO2_B6_u	GPIO2_B6_u	GMAC0_RXD0	UART1_CTSn_M0	SPI1_MISO_M0			
H25	I2S2_SCLK_RX_M0/GMAC0_RXD1/UART6_RTSn_M0/SPI1_MOSI_M0/GPIO2_B7_d	GPIO2_B7_d	I2S2_SCLK_RX_M0	GMAC0_RXD1	UART6_RTSn_M0	SPI1_MOSI_M0		
F24	I2S2_LRCK_RX_M0/GMAC0_RXDV_CRS/UART6_CTSn_M0/SPI1_CS0_M0/GPIO2_C0_d	GPIO2_C0_d	I2S2_LRCK_RX_M0	GMAC0_RXDV_CRS	UART6_CTSn_M0	SPI1_CS0_M0		
G23	I2S2_MCLK_M0/ETH0_REFCLKO_25M/UART7_RTSn_M0/SPI2_CLK_M0/GPIO2_C1_d	GPIO2_C1_d	I2S2_MCLK_M0	ETH0_REFCLKO_25M	UART7_RTSn_M0	SPI2_CLK_M0		
F25	I2S2_SCLK_TX_M0/GMAC0_MCLKINOUT/UART7_CTSn_M0/SPI2_MISO_M0/GPIO2_C2_d	GPIO2_C2_d	I2S2_SCLK_TX_M0	GMAC0_MCLKINOUT	UART7_CTSn_M0	SPI2_MISO_M0		
H24	I2S2_LRCK_TX_M0/GMAC0_MDC/UART9_RTSn_M0/SPI2_MOSI_M0/GPIO2_C3_d	GPIO2_C3_d	I2S2_LRCK_TX_M0	GMAC0_MDC	UART9_RTSn_M0	SPI2_MOSI_M0		
H23	I2S2_SDO_M0/GMAC0_MDIO/UART9_CTSn_M0/SPI2_CS0_M0/GPIO2_C4_d	GPIO2_C4_d	I2S2_SDO_M0	GMAC0_MDIO	UART9_CTSn_M0	SPI2_CS0_M0		
F26	I2S2_SDI_M0/GMAC0_RXER/UART8_TX_M0/SPI2_CS1_M0/GPIO2_C5_d	GPIO2_C5_d	I2S2_SDI_M0	GMAC0_RXER	UART8_TX_M0	SPI2_CS1_M0		
E26	CLK32K_OUT1/UART8_RX_M0/SPI1_CS1_M0/GPIO2_C6_d	GPIO2_C6_d	CLK32K_OUT1	UART8_RX_M0	SPI1_CS1_M0			
AG6	LCDC_D0/VOP_BT656_D0_M0/SPI0_MISO_M1/PCIE20_CLKREQn_M1/I2S1_MCLK_M2/GPIO2_D0_d	GPIO2_D0_d	LCDC_D0	VOP_BT656_D0_M0	SPI0_MISO_M1	PCIE20_CLKREQn_M1	I2S1_MCLK_M2	
AD7	LCDC_D1/VOP_BT656_D1_M0/SPI0_MOSI_M1/PCIE20_WAKEn_M1/I2S1_SCLK_TX_M2/GPIO2_D1_d	GPIO2_D1_d	LCDC_D1	VOP_BT656_D1_M0	SPI0_MOSI_M1	PCIE20_WAKEn_M1	I2S1_SCLK_TX_M2	
AC8	LCDC_D2/VOP_BT656_D2_M0/SPI0_CS0_M1/PCIE30X1_CLKREQn_M1/I2S1_LRCK_TX_M2/GPIO2_D2_d	GPIO2_D2_d	LCDC_D2	VOP_BT656_D2_M0	SPI0_CS0_M1	PCIE30X1_CLKREQn_M1	I2S1_LRCK_TX_M2	
AC7	LCDC_D3/VOP_BT656_D3_M0/SPI0_CLK_M1/PCIE30X1_WAKEn_M1/I2S1_SDI0_M2/GPIO2_D3_d	GPIO2_D3_d	LCDC_D3	VOP_BT656_D3_M0	SPI0_CLK_M1	PCIE30X1_WAKEn_M1	I2S1_SDI0_M2	
AF5	LCDC_D4/VOP_BT656_D4_M0/SPI2_CS1_M1/PCIE30X2_CLKREQn_M1/I2S1_SDI1_M2/GPIO2_D4_d	GPIO2_D4_d	LCDC_D4	VOP_BT656_D4_M0	SPI2_CS1_M1	PCIE30X2_CLKREQn_M1	I2S1_SDI1_M2	
AF6	LCDC_D5/VOP_BT656_D5_M0/SPI2_CS0_M1/PCIE30X2_WAKEn_M1/I2S1_SDI2_M2/GPIO2_D5_d	GPIO2_D5_d	LCDC_D5	VOP_BT656_D5_M0	SPI2_CS0_M1	PCIE30X2_WAKEn_M1	I2S1_SDI2_M2	
AD6	LCDC_D6/VOP_BT656_D6_M0/SPI2_MOSI_M1/PCIE30X2_PERSTn_M1/I2S1_SDI3_M2/GPIO2_D6_d	GPIO2_D6_d	LCDC_D6	VOP_BT656_D6_M0	SPI2_MOSI_M1	PCIE30X2_PERSTn_M1	I2S1_SDI3_M2	
AH5	LCDC_D7/VOP_BT656_D7_M0/SPI2_MISO_M1/UART8_TX_M1/I2S1_SDO0_M2/GPIO2_D7_d	GPIO2_D7_d	LCDC_D7	VOP_BT656_D7_M0	SPI2_MISO_M1	UART8_TX_M1	I2S1_SDO0_M2	
AH4	LCDC_CLK/VOP_BT656_CLK_M0/SPI2_CLK_M1/UART8_RX_M1/I2S1_SDO1_M2/GPIO3_A0_d	GPIO3_A0_d	LCDC_CLK	VOP_BT656_CLK_M0	SPI2_CLK_M1	UART8_RX_M1	I2S1_SDO1_M2	
AB8	LCDC_D8/VOP_BT1120_D0/SPI1_CS0_M1/PCIE30X1_PERSTn_M1/SDMMC2_D0_M1/GPIO3_A1_d	GPIO3_A1_d	LCDC_D8	VOP_BT1120_D0	SPI1_CS0_M1	PCIE30X1_PERSTn_M1	SDMMC2_D0_M1	
AE5	LCDC_D9/VOP_BT1120_D1/GMAC1_TXD2_M0/I2S3_MCLK_M0/SDMMC2_D1_M1/GPIO3_A2_d	GPIO3_A2_d	LCDC_D9	VOP_BT1120_D1	GMAC1_TXD2_M0	I2S3_MCLK_M0	SDMMC2_D1_M1	
AG4	LCDC_D10/VOP_BT1120_D2/GMAC1_TXD3_M0/I2S3_SCLK_M0/SDMMC2_D2_M1/GPIO3_A3_d	GPIO3_A3_d	LCDC_D10	VOP_BT1120_D2	GMAC1_TXD3_M0	I2S3_SCLK_M0	SDMMC2_D2_M1	
AF4	LCDC_D11/VOP_BT1120_D3/GMAC1_RXD2_M0/I2S3_LRCK_M0/SDMMC2_D3_M1/GPIO3_A4_d	GPIO3_A4_d	LCDC_D11	VOP_BT1120_D3	GMAC1_RXD2_M0	I2S3_LRCK_M0	SDMMC2_D3_M1	
AH3	LCDC_D12/VOP_BT1120_D4/GMAC1_RXD3_M0/I2S3_SDO_M0/SDMMC2_CMD_M1/GPIO3_A5_d	GPIO3_A5_d	LCDC_D12	VOP_BT1120_D4	GMAC1_RXD3_M0	I2S3_SDO_M0	SDMMC2_CMD_M1	
AG3	LCDC_D13/VOP_BT1120_CLK/GMAC1_TXCLK_M0/I2S3_SDI_M0/SDMMC2_CLK_M1/GPIO3_A6_d	GPIO3_A6_d	LCDC_D13	VOP_BT1120_CLK	GMAC1_TXCLK_M0	I2S3_SDI_M0	SDMMC2_CLK_M1	
AH2	LCDC_D14/VOP_BT1120_D5/GMAC1_RXCLK_M0/SDMMC2_DET_M1/GPIO3_A7_d	GPIO3_A7_d	LCDC_D14	VOP_BT1120_D5	GMAC1_RXCLK_M0	SDMMC2_DET_M1		
AG2	LCDC_D15/VOP_BT1120_D6/ETH1_REFCLKO_25M_M0/SDMMC2_PWREN_M1/GPIO3_B0_d	GPIO3_B0_d	LCDC_D15	VOP_BT1120_D6	ETH1_REFCLKO_25M_M0	SDMMC2_PWREN_M1		
AG1	LCDC_D16/VOP_BT1120_D7/GMAC1_RXD0_M0/UART4_RX_M1/PWM8_M0/GPIO3_B1_d	GPIO3_B1_d	LCDC_D16	VOP_BT1120_D7	GMAC1_RXD0_M0	UART4_RX_M1	PWM8_M0	
AF2	LCDC_D17/VOP_BT1120_D8/GMAC1_RXD1_M0/UART4_TX_M1/PWM9_M0/GPIO3_B2_d	GPIO3_B2_d	LCDC_D17	VOP_BT1120_D8	GMAC1_RXD1_M0	UART4_TX_M1	PWM9_M0	
AF1	LCDC_D18/VOP_BT1120_D9/GMAC1_RXDV_CRS_M0/I2C5_SCL_M0/PDM_SDI0_M2/GPIO3_B3_d	GPIO3_B3_d	LCDC_D18	VOP_BT1120_D9	GMAC1_RXDV_CRS_M0	I2C5_SCL_M0	PDM_SDI0_M2	
AE1	LCDC_D19/VOP_BT1120_D10/GMAC1_RXER_M0/I2C5_SDA_M0/PDM_SDI1_M2/GPIO3_B4_d	GPIO3_B4_d	LCDC_D19	VOP_BT1120_D10	GMAC1_RXER_M0	I2C5_SDA_M0	PDM_SDI1_M2	
AE2	LCDC_D20/VOP_BT1120_D11/GMAC1_TXD0_M0/I2C3_SCL_M1/PWM10_M0/GPIO3_B5_d	GPIO3_B5_d	LCDC_D20	VOP_BT1120_D11	GMAC1_TXD0_M0	I2C3_SCL_M1	PWM10_M0	
AE3	LCDC_D21/VOP_BT1120_D12/GMAC1_TXD1_M0/I2C3_SDA_M1/PWM11_IR_M0/GPIO3_B6_d	GPIO3_B6_d	LCDC_D21	VOP_BT1120_D12	GMAC1_TXD1_M0	I2C3_SDA_M1	PWM11_IR_M0	
AD4	LCDC_D22/PWM12_M0/GMAC1_TXEN_M0/UART3_TX_M1/PDM_SDI2_M2/GPIO3_B7_d	GPIO3_B7_d	LCDC_D22	PWM12_M0	GMAC1_TXEN_M0	UART3_TX_M1	PDM_SDI2_M2	
AD2	LCDC_D23/PWM13_M0/GMAC1_MCLKINOUT_M0/UART3_RX_M1/PDM_SDI3_M2/GPIO3_C0_d	GPIO3_C0_d	LCDC_D23	PWM13_M0	GMAC1_MCLKINOUT_M0	UART3_RX_M1	PDM_SDI3_M2	

Rockchip Confidential

PIN	PIN Name	Func1	Func2	Func3	Func4	Func5	Func6	Die Power Domain
AD1	LCDC_HSYNC/VOP_BT1120_D13/SPI1_MOSI_M1/PCIE20_PERSTn_M1/I2S1_SDO2_M2/GPIO3_C1_d	GPIO3_C1_d	LCDC_HSYNC	VOP_BT1120_D13	SPI1_MOSI_M1	PCIE20_PERSTn_M1	I2S1_SDO2_M2	
AA7	LCDC_VSYNC/VOP_BT1120_D14/SPI1_MISO_M1/UART5_TX_M1/I2S1_SDO3_M2/GPIO3_C2_d	GPIO3_C2_d	LCDC_VSYNC	VOP_BT1120_D14	SPI1_MISO_M1	UART5_TX_M1	I2S1_SDO3_M2	
AC4	LCDC_DEN/VOP_BT1120_D15/SPI1_CLK_M1/UART5_RX_M1/I2S1_SCLK_RX_M2/GPIO3_C3_d	GPIO3_C3_d	LCDC_DEN	VOP_BT1120_D15	SPI1_CLK_M1	UART5_RX_M1	I2S1_SCLK_RX_M2	
AC3	PWM14_M0/VOP_PWM_M1/GMAC1_MDC_M0/UART7_TX_M1/PDM_CLK1_M2/GPIO3_C4_d	GPIO3_C4_d	PWM14_M0	VOP_PWM_M1	GMAC1_MDC_M0	UART7_TX_M1	PDM_CLK1_M2	
AC2	PWM15_IR_M0/SPDIF_TX_M1/GMAC1_MDIO_M0/UART7_RX_M1/I2S1_LRCK_RX_M2/GPIO3_C5_d	GPIO3_C5_d	PWM15_IR_M0	SPDIF_TX_M1	GMAC1_MDIO_M0	UART7_RX_M1	I2S1_LRCK_RX_M2	
AC5	CIF_D0/EBC_SDDO0/SDMMC2_D0_M0/I2S1_MCLK_M1/VOP_BT656_D0_M1/GPIO3_C6_d	GPIO3_C6_d	CIF_D0	EBC_SDDO0	SDMMC2_D0_M0	I2S1_MCLK_M1	VOP_BT656_D0_M1	VCCIO6
AA6	CIF_D1/EBC_SDDO1/SDMMC2_D1_M0/I2S1_SCLK_TX_M1/VOP_BT656_D1_M1/GPIO3_C7_d	GPIO3_C7_d	CIF_D1	EBC_SDDO1	SDMMC2_D1_M0	I2S1_SCLK_TX_M1	VOP_BT656_D1_M1	
AB5	CIF_D2/EBC_SDDO2/SDMMC2_D2_M0/I2S1_LRCK_TX_M1/VOP_BT656_D2_M1/GPIO3_D0_d	GPIO3_D0_d	CIF_D2	EBC_SDDO2	SDMMC2_D2_M0	I2S1_LRCK_TX_M1	VOP_BT656_D2_M1	
AB1	CIF_D3/EBC_SDDO3/SDMMC2_D3_M0/I2S1_SDO0_M1/VOP_BT656_D3_M1/GPIO3_D1_d	GPIO3_D1_d	CIF_D3	EBC_SDDO3	SDMMC2_D3_M0	I2S1_SDO0_M1	VOP_BT656_D3_M1	
Y7	CIF_D4/EBC_SDDO4/SDMMC2_CMD_M0/I2S1_SDI0_M1/VOP_BT656_D4_M1/GPIO3_D2_d	GPIO3_D2_d	CIF_D4	EBC_SDDO4	SDMMC2_CMD_M0	I2S1_SDI0_M1	VOP_BT656_D4_M1	
AC1	CIF_D5/EBC_SDDO5/SDMMC2_CLK_M0/I2S1_SDI1_M1/VOP_BT656_D5_M1/GPIO3_D3_d	GPIO3_D3_d	CIF_D5	EBC_SDDO5	SDMMC2_CLK_M0	I2S1_SDI1_M1	VOP_BT656_D5_M1	
AA1	CIF_D6/EBC_SDDO6/SDMMC2_DET_M0/I2S1_SDI2_M1/VOP_BT656_D6_M1/GPIO3_D4_d	GPIO3_D4_d	CIF_D6	EBC_SDDO6	SDMMC2_DET_M0	I2S1_SDI2_M1	VOP_BT656_D6_M1	
AA5	CIF_D7/EBC_SDDO7/SDMMC2_PWREN_M0/I2S1_SDI3_M1/VOP_BT656_D7_M1/GPIO3_D5_d	GPIO3_D5_d	CIF_D7	EBC_SDDO7	SDMMC2_PWREN_M0	I2S1_SDI3_M1	VOP_BT656_D7_M1	
Y6	CIF_D8/EBC_SDDO8/GMAC1_TXD2_M1/UART1_TX_M1/PDM_CLK0_M1/GPIO3_D6_d	GPIO3_D6_d	CIF_D8	EBC_SDDO8	GMAC1_TXD2_M1	UART1_TX_M1	PDM_CLK0_M1	
Y5	CIF_D9/EBC_SDDO9/GMAC1_TXD3_M1/UART1_RX_M1/PDM_SDI0_M1/GPIO3_D7_d	GPIO3_D7_d	CIF_D9	EBC_SDDO9	GMAC1_TXD3_M1	UART1_RX_M1	PDM_SDI0_M1	
AA3	CIF_D10/EBC_SDDO10/GMAC1_TXCLK_M1/PDM_CLK1_M1/GPIO4_A0_d	GPIO4_A0_d	CIF_D10	EBC_SDDO10	GMAC1_TXCLK_M1	PDM_CLK1_M1		
AA2	CIF_D11/EBC_SDDO11/GMAC1_RXD2_M1/PDM_SDI1_M1/GPIO4_A1_d	GPIO4_A1_d	CIF_D11	EBC_SDDO11	GMAC1_RXD2_M1	PDM_SDI1_M1		
Y4	CIF_D12/EBC_SDDO12/GMAC1_RXD3_M1/UART7_TX_M2/PDM_SDI2_M1/GPIO4_A2_d	GPIO4_A2_d	CIF_D12	EBC_SDDO12	GMAC1_RXD3_M1	UART7_TX_M2	PDM_SDI2_M1	
Y3	CIF_D13/EBC_SDDO13/GMAC1_RXCLK_M1/UART7_RX_M2/PDM_SDI3_M1/GPIO4_A3_d	GPIO4_A3_d	CIF_D13	EBC_SDDO13	GMAC1_RXCLK_M1	UART7_RX_M2	PDM_SDI3_M1	
Y2	CIF_D14/EBC_SDDO14/GMAC1_TXD0_M1/UART9_TX_M2/I2S2_LRCK_TX_M1/GPIO4_A4_d	GPIO4_A4_d	CIF_D14	EBC_SDDO14	GMAC1_TXD0_M1	UART9_TX_M2	I2S2_LRCK_TX_M1	
Y1	CIF_D15/EBC_SDDO15/GMAC1_TXD1_M1/UART9_RX_M2/I2S2_LRCK_RX_M1/GPIO4_A5_d	GPIO4_A5_d	CIF_D15	EBC_SDDO15	GMAC1_TXD1_M1	UART9_RX_M2	I2S2_LRCK_RX_M1	
W2	ISP_FLASHTRIGOUT/EBC_SDCE0/GMAC1_TXEN_M1/SPI3_CS0_M0/I2S1_SCLK_RX_M1/GPIO4_A6_d	GPIO4_A6_d	ISP_FLASHTRIGOUT	EBC_SDCE0	GMAC1_TXEN_M1	SPI3_CS0_M0	I2S1_SCLK_RX_M1	
W1	CAM_CLKOUT0/EBC_SDCE1/GMAC1_RXD0_M1/SPI3_CS1_M0/I2S1_LRCK_RX_M1/GPIO4_A7_d	GPIO4_A7_d	CAM_CLKOUT0	EBC_SDCE1	GMAC1_RXD0_M1	SPI3_CS1_M0	I2S1_LRCK_RX_M1	
V7	CAM_CLKOUT1/EBC_SDCE2/GMAC1_RXD1_M1/SPI3_MISO_M0/I2S1_SDO1_M1/GPIO4_B0_d	GPIO4_B0_d	CAM_CLKOUT1	EBC_SDCE2	GMAC1_RXD1_M1	SPI3_MISO_M0	I2S1_SDO1_M1	
V2	ISP_PRELIGHT_TRIG/EBC_SDCE3/GMAC1_RXDV_CRS_M1/I2S1_SDO2_M1/GPIO4_B1_d	GPIO4_B1_d	ISP_PRELIGHT_TRIG	EBC_SDCE3	GMAC1_RXDV_CRS_M1	I2S1_SDO2_M1		
V4	I2C4_SDA_M0/EBC_VCOM/GMAC1_RXER_M1/SPI3_MOSI_M0/I2S2_SDI_M1/GPIO4_B2_d	GPIO4_B2_d	I2C4_SDA_M0	EBC_VCOM	GMAC1_RXER_M1	SPI3_MOSI_M0	I2S2_SDI_M1	
V1	I2C4_SCL_M0/EBC_GDOE/ETH1_REFCLKO_25M_M1/SPI3_CLK_M0/I2S2_SDO_M1/GPIO4_B3_d	GPIO4_B3_d	I2C4_SCL_M0	EBC_GDOE	ETH1_REFCLKO_25M_M1	SPI3_CLK_M0	I2S2_SDO_M1	
V6	I2C2_SDA_M1/EBC_GDSP/CAN2_RX_M0/ISP_FLASH_TRIGIN/VOP_BT656_CLK_M1/GPIO4_B4_d	GPIO4_B4_d	I2C2_SDA_M1	EBC_GDSP	CAN2_RX_M0	ISP_FLASH_TRIGIN	VOP_BT656_CLK_M1	
V5	I2C2_SCL_M1/EBC_SDSHR/CAN2_TX_M0/I2S1_SDO3_M1/GPIO4_B5_d	GPIO4_B5_d	I2C2_SCL_M1	EBC_SDSHR	CAN2_TX_M0	I2S1_SDO3_M1		
U5	CIF_HREF/EBC_SDLE/GMAC1_MDC_M1/UART1_RTSn_M1/I2S2_MCLK_M1/GPIO4_B6_d	GPIO4_B6_d	CIF_HREF	EBC_SDLE	GMAC1_MDC_M1	UART1_RTSn_M1	I2S2_MCLK_M1	
U4	CIF_VSYNC/EBC_SDOE/GMAC1_MDIO_M1/I2S2_SCLK_TX_M1/GPIO4_B7_d	GPIO4_B7_d	CIF_VSYNC	EBC_SDOE	GMAC1_MDIO_M1	I2S2_SCLK_TX_M1		
U3	CIF_CLKOUT/EBC_GDCLK/PWM11_IR_M1/GPIO4_C0_d	GPIO4_C0_d	CIF_CLKOUT	EBC_GDCLK	PWM11_IR_M1			
U2	CIF_CLKIN/EBC_SDCLK/GMAC1_MCLKINOUT_M1/UART1_CTSn_M1/I2S2_SCLK_RX_M1/GPIO4_C1_d	GPIO4_C1_d	CIF_CLKIN	EBC_SDCLK	GMAC1_MCLKINOUT_M1	UART1_CTSn_M1	I2S2_SCLK_RX_M1	
AF8	PWM14_M1/SPI3_CLK_M1/CAN1_RX_M1/PCIE30X2_CLKREQn_M2/I2S3_MCLK_M1/GPIO4_C2_d	GPIO4_C2_d	PWM14_M1	SPI3_CLK_M1	CAN1_RX_M1	PCIE30X2_CLKREQn_M2	I2S3_MCLK_M1	VCCIO7
AA11	PWM15_IR_M1/SPI3_MOSI_M1/CAN1_TX_M1/PCIE30X2_WAKEn_M2/I2S3_SCLK_M1/GPIO4_C3_d	GPIO4_C3_d	PWM15_IR_M1	SPI3_MOSI_M1	CAN1_TX_M1	PCIE30X2_WAKEn_M2	I2S3_SCLK_M1	
AH7	EDP_HPDIN_M0/SPDIF_TX_M2/SATA2_ACT_LED/PCIE30X2_PERSTn_M2/I2S3_LRCK_M1/GPIO4_C4_d	GPIO4_C4_d	EDP_HPDIN_M0	SPDIF_TX_M2	SATA2_ACT_LED	PCIE30X2_PERSTn_M2	I2S3_LRCK_M1	
AD8	PWM12_M1/SPI3_MISO_M1/SATA1_ACT_LED/UART9_TX_M1/I2S3_SDO_M1/GPIO4_C5_d	GPIO4_C5_d	PWM12_M1	SPI3_MISO_M1	SATA1_ACT_LED	UART9_TX_M1	I2S3_SDO_M1	
AE8	PWM13_M1/SPI3_CS0_M1/SATA0_ACT_LED/UART9_RX_M1/I2S3_SDI_M1/GPIO4_C6_d	GPIO4_C6_d	PWM13_M1	SPI3_CS0_M1	SATA0_ACT_LED	UART9_RX_M1	I2S3_SDI_M1	

Rockchip Confidential

PIN	PIN Name	Func1	Func2	Func3	Func4	Func5	Func6	Die Power Domain
AG8	HDMITX_SCL/I2C5_SCL_M1/GPIO4_C7_u	GPIO4_C7_u	HDMITX_SCL	I2C5_SCL_M1				
AG7	HDMITX_SDA/I2C5_SDA_M1/GPIO4_D0_u	GPIO4_D0_u	HDMITX_SDA	I2C5_SDA_M1				
AH6	HDMITX_CEC_M0/SPI3_CS1_M1/GPIO4_D1_u	GPIO4_D1_u	HDMITX_CEC_M0	SPI3_CS1_M1				
AB9	GPIO4_D2_d	GPIO4_D2_d						
AG19	HDMI_TX_CLKN	HDMI_TX_CLKN						
AH19	HDMI_TX_CLKP	HDMI_TX_CLKP						
AH20	HDMI_TX_D0N	HDMI_TX_D0N						
AG20	HDMI_TX_D0P	HDMI_TX_D0P						
AH21	HDMI_TX_D1N	HDMI_TX_D1N						
AG21	HDMI_TX_D1P	HDMI_TX_D1P						HDMI
AH22	HDMI_TX_D2N	HDMI_TX_D2N						
AG22	HDMI_TX_D2P	HDMI_TX_D2P						
AB18	HDMI_TX_HPDIN	HDMI_TX_HPDIN						
AA18	HDMI_TX_REXT	HDMI_TX_REXT						
AH10	MIPI_CSI_RX_CLK0N	MIPI_CSI_RX_CLK0N						
AG10	MIPI_CSI_RX_CLK0P	MIPI_CSI_RX_CLK0P						
AH9	MIPI_CSI_RX_CLK1N	MIPI_CSI_RX_CLK1N						
AG9	MIPI_CSI_RX_CLK1P	MIPI_CSI_RX_CLK1P						
AH12	MIPI_CSI_RX_D0N	MIPI_CSI_RX_D0N						
AG12	MIPI_CSI_RX_D0P	MIPI_CSI_RX_D0P						
AH11	MIPI_CSI_RX_D1N	MIPI_CSI_RX_D1N						MIPI_CSI_RX
AG11	MIPI_CSI_RX_D1P	MIPI_CSI_RX_D1P						
AD11	MIPI_CSI_RX_D2N	MIPI_CSI_RX_D2N						
AE11	MIPI_CSI_RX_D2P	MIPI_CSI_RX_D2P						
AE9	MIPI_CSI_RX_D3N	MIPI_CSI_RX_D3N						
AD9	MIPI_CSI_RX_D3P	MIPI_CSI_RX_D3P						
AG15	MIPI_DSI_TX0_CLKN/LVDS_TX0_CLKN	MIPI_DSI_TX0_CLKN	LVDS_TX0_CLKN					
AH15	MIPI_DSI_TX0_CLKP/LVDS_TX0_CLKP	MIPI_DSI_TX0_CLKP	LVDS_TX0_CLKP					
AG17	MIPI_DSI_TX0_D0N/LVDS_TX0_D0N	MIPI_DSI_TX0_D0N	LVDS_TX0_D0N					
AH17	MIPI_DSI_TX0_D0P/LVDS_TX0_D0P	MIPI_DSI_TX0_D0P	LVDS_TX0_D0P					
AG16	MIPI_DSI_TX0_D1N/LVDS_TX0_D1N	MIPI_DSI_TX0_D1N	LVDS_TX0_D1N					
AH16	MIPI_DSI_TX0_D1P/LVDS_TX0_D1P	MIPI_DSI_TX0_D1P	LVDS_TX0_D1P					MIPI_DSI_TX0
AG14	MIPI_DSI_TX0_D2N/LVDS_TX0_D2N	MIPI_DSI_TX0_D2N	LVDS_TX0_D2N					
AH14	MIPI_DSI_TX0_D2P/LVDS_TX0_D2P	MIPI_DSI_TX0_D2P	LVDS_TX0_D2P					
AG13	MIPI_DSI_TX0_D3N/LVDS_TX0_D3N	MIPI_DSI_TX0_D3N	LVDS_TX0_D3N					
AH13	MIPI_DSI_TX0_D3P/LVDS_TX0_D3P	MIPI_DSI_TX0_D3P	LVDS_TX0_D3P					
AE15	MIPI_DSI_TX1_CLKN/LVDS_TX1_CLKN	MIPI_DSI_TX1_CLKN	LVDS_TX1_CLKN					
AD15	MIPI_DSI_TX1_CLKP/LVDS_TX1_CLKP	MIPI_DSI_TX1_CLKP	LVDS_TX1_CLKP					
AE18	MIPI_DSI_TX1_D0N/LVDS_TX1_D0N	MIPI_DSI_TX1_D0N	LVDS_TX1_D0N					MIPI_DSI_TX1
AD18	MIPI_DSI_TX1_D0P/LVDS_TX1_D0P	MIPI_DSI_TX1_D0P	LVDS_TX1_D0P					
AC17	MIPI_DSI_TX1_D1N/LVDS_TX1_D1N	MIPI_DSI_TX1_D1N	LVDS_TX1_D1N					

Rockchip Confidential

PIN	PIN Name	Func1	Func2	Func3	Func4	Func5	Func6	Die Power Domain
AD17	MIPI_DSI_TX1_D1P/LVDS_TX1_D1P	MIPI_DSI_TX1_D1P	LVDS_TX1_D1P					
AC14	MIPI_DSI_TX1_D2N/LVDS_TX1_D2N	MIPI_DSI_TX1_D2N	LVDS_TX1_D2N					
AD14	MIPI_DSI_TX1_D2P/LVDS_TX1_D2P	MIPI_DSI_TX1_D2P	LVDS_TX1_D2P					
AE12	MIPI_DSI_TX1_D3N/LVDS_TX1_D3N	MIPI_DSI_TX1_D3N	LVDS_TX1_D3N					
AD12	MIPI_DSI_TX1_D3P/LVDS_TX1_D3P	MIPI_DSI_TX1_D3P	LVDS_TX1_D3P					
M25	EDP_TX_AUXN	EDP_TX_AUXN						
L25	EDP_TX_AUXP	EDP_TX_AUXP						
K27	EDP_TX_D0N	EDP_TX_D0N						
J28	EDP_TX_D0P	EDP_TX_D0P						
L27	EDP_TX_D1N	EDP_TX_D1N						
K28	EDP_TX_D1P	EDP_TX_D1P						
M27	EDP_TX_D2N	EDP_TX_D2N						
L28	EDP_TX_D2P	EDP_TX_D2P						
N27	EDP_TX_D3N	EDP_TX_D3N						
M28	EDP_TX_D3P	EDP_TX_D3P						
R25	MULTI_PHY0_REFCLKN	MULTI_PHY0_REFCLKN						EDP
R24	MULTI_PHY0_REFCLKP	MULTI_PHY0_REFCLKP						
U24	MULTI_PHY1_REFCLKN	MULTI_PHY1_REFCLKN						
U25	MULTI_PHY1_REFCLKP	MULTI_PHY1_REFCLKP						
V25	PCIE20_REFCLKN	PCIE20_REFCLKN						
V24	PCIE20_REFCLKP	PCIE20_REFCLKP						
Y28	PCIE20_RXN/SATA2_RXN/QSGMII_RXN_M1	PCIE20_RXN	SATA2_RXN	QSGMII_RXN_M1				
Y27	PCIE20_RXP/SATA2_RXP/QSGMII_RXP_M1	PCIE20_RXP	SATA2_RXP	QSGMII_RXP_M1				
W28	PCIE20_TXN/SATA2_TXN/QSGMII_TXN_M1	PCIE20_TXN	SATA2_TXN	QSGMII_TXN_M1				
W27	PCIE20_TXP/SATA2_TXP/QSGMII_TXP_M1	PCIE20_TXP	SATA2_TXP	QSGMII_TXP_M1				
AA25	PCIE30_REFCLKN_IN	PCIE30_REFCLKN_IN						
Y25	PCIE30_REFCLKP_IN	PCIE30_REFCLKP_IN						MUITI_PHY
U19	PCIE30_RESREF	PCIE30_RESREF						
AC27	PCIE30_RX0N	PCIE30_RX0N						
AC28	PCIE30_RX0P	PCIE30_RX0P						
AD27	PCIE30_RX1N	PCIE30_RX1N						
AD28	PCIE30_RX1P	PCIE30_RX1P						
AA27	PCIE30_TX0N	PCIE30_TX0N						MULTI_PHY0
AA28	PCIE30_TX0P	PCIE30_TX0P						
AB27	PCIE30_TX1N	PCIE30_TX1N						
AB28	PCIE30_TX1P	PCIE30_TX1P						
B27	SARADC_VIN0	SARADC_VIN0						
C26	SARADC_VIN1	SARADC_VIN1						
D24	SARADC_VIN2	SARADC_VIN2						
E23	SARADC_VIN3	SARADC_VIN3						PCIE30
G21	SARADC_VIN4	SARADC_VIN4						
F22	SARADC_VIN5	SARADC_VIN5						
G20	SARADC_VIN6	SARADC_VIN6						
F21	SARADC_VIN7	SARADC_VIN7						

Rockchip Confidential

PIN	PIN Name	Func1	Func2	Func3	Func4	Func5	Func6	Die Power Domain
R1	USB2_HOST2_DM	USB2_HOST2_DM						
R2	USB2_HOST2_DP	USB2_HOST2_DP						
T1	USB2_HOST3_DM	USB2_HOST3_DM						SARADC
T2	USB2_HOST3_DP	USB2_HOST3_DP						
P25	USB3_HOST1_DM	USB3_HOST1_DM						
P24	USB3_HOST1_DP	USB3_HOST1_DP						
U27	USB3_HOST1_SSRXN/SATA1_RXN/QSGMII_RXN_M0	USB3_HOST1_SSRXN	SATA1_RXN	QSGMII_RXN_M0				
U28	USB3_HOST1_SSRXP/SATA1_RXP/QSGMII_RXP_M0	USB3_HOST1_SSRXP	SATA1_RXP	QSGMII_RXP_M0				
V27	USB3_HOST1_SSTXN/SATA1_TXN/QSGMII_TXN_M0	USB3_HOST1_SSTXN	SATA1_TXN	QSGMII_TXN_M0				
V28	USB3_HOST1_SSTXP/SATA1_TXP/QSGMII_TXP_M0	USB3_HOST1_SSTXP	SATA1_TXP	QSGMII_TXP_M0				
P28	USB3_OTG0_DM	USB3_OTG0_DM						USB2
P27	USB3_OTG0_DP	USB3_OTG0_DP						
L23	USB3_OTG0_ID	USB3_OTG0_ID						
R27	USB3_OTG0_SSRXN/SATA0_RXN	USB3_OTG0_SSRXN	SATA0_RXN					
R28	USB3_OTG0_SSRXP/SATA0_RXP	USB3_OTG0_SSRXP	SATA0_RXP					
T27	USB3_OTG0_SSTXN/SATA0_TXN	USB3_OTG0_SSTXN	SATA0_TXN					
T28	USB3_OTG0_SSTXP/SATA0_TXP	USB3_OTG0_SSTXP	SATA0_TXP					
M24	USB3_OTG0_VBUSDET	USB3_OTG0_VBUSDET						USB3
H5	DDR_DM0_A/DDR4_DML_A/LPDDR4_DM0_A/DDR3_DM0/LPDDR3_DM1	DDR4_DML_A	LPDDR4_DM0_A	DDR3_DM0	LPDDR3_DM1			
D14	DDR_DM0_B/DDR4_DMU_B/LPDDR4_DM0_B/DDR3_DM2/LPDDR3_DM0	DDR4_DMU_B	LPDDR4_DM0_B	DDR3_DM2	LPDDR3_DM0			
J4	DDR_DM1_A/DDR4_DMU_A/LPDDR4_DM1_A/DDR3_DM1/LPDDR3_DM3	DDR4_DMU_A	LPDDR4_DM1_A	DDR3_DM1	LPDDR3_DM3			
E17	DDR_DM1_B/DDR4_DML_B/LPDDR4_DM1_B/DDR3_DM3/LPDDR3_DM2	DDR4_DML_B	LPDDR4_DM1_B	DDR3_DM3	LPDDR3_DM2			
F2	DDR_DQ0_A/DDR4_DQL0_A/LPDDR4_DQ0_A/DDR3_DQ0/LPDDR3_DQ15	DDR4_DQL0_A	LPDDR4_DQ0_A	DDR3_DQ0	LPDDR3_DQ15			
B10	DDR_DQ0_B/DDR4_DQU7_B/LPDDR4_DQ0_B/DDR3_DQ16/LPDDR3_DQ1	DDR4_DQU7_B	LPDDR4_DQ0_B	DDR3_DQ16	LPDDR3_DQ1			
E1	DDR_DQ1_A/DDR4_DQL2_A/LPDDR4_DQ1_A/DDR3_DQ1/LPDDR3_DQ14	DDR4_DQL2_A	LPDDR4_DQ1_A	DDR3_DQ1	LPDDR3_DQ14			
A9	DDR_DQ1_B/DDR4_DQU5_B/LPDDR4_DQ1_B/DDR3_DQ17/LPDDR3_DQ5	DDR4_DQU5_B	LPDDR4_DQ1_B	DDR3_DQ17	LPDDR3_DQ5			
L7	DDR_DQ10_A/DDR4_DQU7_A/LPDDR4_DQ10_A/DDR3_DQ10/LPDDR3_DQ28	DDR4_DQU7_A	LPDDR4_DQ10_A	DDR3_DQ10	LPDDR3_DQ28			
A17	DDR_DQ10_B/DDR4_DQL4_B/LPDDR4_DQ10_B/DDR3_DQ26/LPDDR3_DQ22	DDR4_DQL4_B	LPDDR4_DQ10_B	DDR3_DQ26	LPDDR3_DQ22			
L6	DDR_DQ11_A/DDR4_DQU5_A/LPDDR4_DQ11_A/DDR3_DQ11/LPDDR3_DQ29	DDR4_DQU5_A	LPDDR4_DQ11_A	DDR3_DQ11	LPDDR3_DQ29			
B18	DDR_DQ11_B/DDR4_DQL6_B/LPDDR4_DQ11_B/DDR3_DQ27/LPDDR3_DQ23	DDR4_DQL6_B	LPDDR4_DQ11_B	DDR3_DQ27	LPDDR3_DQ23			
K2	DDR_DQ12_A/DDR4_DQU2_A/LPDDR4_DQ12_A/DDR3_DQ12/LPDDR3_DQ26	DDR4_DQU2_A	LPDDR4_DQ12_A	DDR3_DQ12	LPDDR3_DQ26			
B13	DDR_DQ12_B/DDR4_DQL7_B/LPDDR4_DQ12_B/DDR3_DQ28/LPDDR3_DQ16	DDR4_DQL7_B	LPDDR4_DQ12_B	DDR3_DQ28	LPDDR3_DQ16			
J6	DDR_DQ13_A/DDR4_DQU4_A/LPDDR4_DQ13_A/DDR3_DQ13/LPDDR3_DQ31	DDR4_DQU4_A	LPDDR4_DQ13_A	DDR3_DQ13	LPDDR3_DQ31			
A13	DDR_DQ13_B/DDR4_DQL5_B/LPDDR4_DQ13_B/DDR3_DQ29/LPDDR3_DQ17	DDR4_DQL5_B	LPDDR4_DQ13_B	DDR3_DQ29	LPDDR3_DQ17			
J7	DDR_DQ14_A/DDR4_DQU6_A/LPDDR4_DQ14_A/DDR3_DQ14/LPDDR3_DQ30	DDR4_DQU6_A	LPDDR4_DQ14_A	DDR3_DQ14	LPDDR3_DQ30			
D17	DDR_DQ14_B/DDR4_DQL1_B/LPDDR4_DQ14_B/DDR3_DQ30/LPDDR3_DQ20	DDR4_DQL1_B	LPDDR4_DQ14_B	DDR3_DQ30	LPDDR3_DQ20			
L4	DDR_DQ15_A/DDR4_DQU0_A/LPDDR4_DQ15_A/DDR3_DQ15/LPDDR3_DQ27	DDR4_DQU0_A	LPDDR4_DQ15_A	DDR3_DQ15	LPDDR3_DQ27			
B14	DDR_DQ15_B/DDR4_DQL3_B/LPDDR4_DQ15_B/DDR3_DQ31/LPDDR3_DQ21	DDR4_DQL3_B	LPDDR4_DQ15_B	DDR3_DQ31	LPDDR3_DQ21			
E2	DDR_DQ2_A/DDR4_DQL4_A/LPDDR4_DQ2_A/DDR3_DQ2/LPDDR3_DQ10	DDR4_DQL4_A	LPDDR4_DQ2_A	DDR3_DQ2	LPDDR3_DQ10			

Rockchip Confidential

PIN	PIN Name	Func1	Func2	Func3	Func4	Func5	Func6	Die Power Domain
D12	DDR_DQ2_B/DDR4_DQU3_B/LPDDR4_DQ2_B/DDR3_DQ18/LPDDR3_DQ6	DDR4_DQU3_B	LPDDR4_DQ2_B	DDR3_DQ18	LPDDR3_DQ6			
D1	DDR_DQ3_A/DDR4_DQL6_A/LPDDR4_DQ3_A/DDR3_DQ3/LPDDR3_DQ9	DDR4_DQL6_A	LPDDR4_DQ3_A	DDR3_DQ3	LPDDR3_DQ9			
E12	DDR_DQ3_B/DDR4_DQU1_B/LPDDR4_DQ3_B/DDR3_DQ19/LPDDR3_DQ4	DDR4_DQU1_B	LPDDR4_DQ3_B	DDR3_DQ19	LPDDR3_DQ4			
J1	DDR_DQ4_A/DDR4_DQL7_A/LPDDR4_DQ4_A/DDR3_DQ4/LPDDR3_DQ13	DDR4_DQL7_A	LPDDR4_DQ4_A	DDR3_DQ4	LPDDR3_DQ13			
A12	DDR_DQ4_B/DDR4_DQU0_B/LPDDR4_DQ4_B/DDR3_DQ20/LPDDR3_DQ2	DDR4_DQU0_B	LPDDR4_DQ4_B	DDR3_DQ20	LPDDR3_DQ2			
J2	DDR_DQ5_A/DDR4_DQL5_A/LPDDR4_DQ5_A/DDR3_DQ5/LPDDR3_DQ12	DDR4_DQL5_A	LPDDR4_DQ5_A	DDR3_DQ5	LPDDR3_DQ12			
D15	DDR_DQ5_B/DDR4_DQU6_B/LPDDR4_DQ5_B/DDR3_DQ21/LPDDR3_DQ3	DDR4_DQU6_B	LPDDR4_DQ5_B	DDR3_DQ21	LPDDR3_DQ3			
H1	DDR_DQ6_A/DDR4_DQL3_A/LPDDR4_DQ6_A/DDR3_DQ6/LPDDR3_DQ8	DDR4_DQL3_A	LPDDR4_DQ6_A	DDR3_DQ6	LPDDR3_DQ8			
E15	DDR_DQ6_B/DDR4_DQU4_B/LPDDR4_DQ6_B/DDR3_DQ22/LPDDR3_DQ7	DDR4_DQU4_B	LPDDR4_DQ6_B	DDR3_DQ22	LPDDR3_DQ7			
H4	DDR_DQ7_A/DDR4_DQL1_A/LPDDR4_DQ7_A/DDR3_DQ7/LPDDR3_DQ11	DDR4_DQL1_A	LPDDR4_DQ7_A	DDR3_DQ7	LPDDR3_DQ11			
E14	DDR_DQ7_B/DDR4_DQU2_B/LPDDR4_DQ7_B/DDR3_DQ23/LPDDR3_DQ0	DDR4_DQU2_B	LPDDR4_DQ7_B	DDR3_DQ23	LPDDR3_DQ0			
M1	DDR_DQ8_A/DDR4_DQU3_A/LPDDR4_DQ8_A/DDR3_DQ8/LPDDR3_DQ25	DDR4_DQU3_A	LPDDR4_DQ8_A	DDR3_DQ8	LPDDR3_DQ25			
A16	DDR_DQ8_B/DDR4_DQL0_B/LPDDR4_DQ8_B/DDR3_DQ24/LPDDR3_DQ18	DDR4_DQL0_B	LPDDR4_DQ8_B	DDR3_DQ24	LPDDR3_DQ18			
N2	DDR_DQ9_A/DDR4_DQU1_A/LPDDR4_DQ9_A/DDR3_DQ9/LPDDR3_DQ24	DDR4_DQU1_A	LPDDR4_DQ9_A	DDR3_DQ9	LPDDR3_DQ24			
B17	DDR_DQ9_B/DDR4_DQL2_B/LPDDR4_DQ9_B/DDR3_DQ25/LPDDR3_DQ19	DDR4_DQL2_B	LPDDR4_DQ9_B	DDR3_DQ25	LPDDR3_DQ19			
G2	DDR_DQS0N_A/DDR4_DQSL_N_A/LPDDR4_DQS0N_A/DDR3_DQS0N/LPDDR3_DQS1N	DDR4_DQSL_N_A	LPDDR4_DQS0N_A	DDR3_DQS0N	LPDDR3_DQS1N			
B11	DDR_DQS0N_B/DDR4_DQSU_N_B/LPDDR4_DQS0N_B/DDR3_DQS2N/LPDDR3_DQS0N	DDR4_DQSU_N_B	LPDDR4_DQS0N_B	DDR3_DQS2N	LPDDR3_DQS0N			
G1	DDR_DQS0P_A/DDR4_DQSL_P_A/LPDDR4_DQS0P_A/DDR3_DQS0P/LPDDR3_DQS1P	DDR4_DQSL_P_A	LPDDR4_DQS0P_A	DDR3_DQS0P	LPDDR3_DQS1P			
A11	DDR_DQS0P_B/DDR4_DQSU_P_B/LPDDR4_DQS0P_B/DDR3_DQS2P/LPDDR3_DQS0P	DDR4_DQSU_P_B	LPDDR4_DQS0P_B	DDR3_DQS2P	LPDDR3_DQS0P			
L1	DDR_DQS1N_A/DDR4_DQSU_N_A/LPDDR4_DQS1N_A/DDR3_DQS1N/LPDDR3_DQS3N	DDR4_DQSU_N_A	LPDDR4_DQS1N_A	DDR3_DQS1N	LPDDR3_DQS3N			
A15	DDR_DQS1N_B/DDR4_DQSL_N_B/LPDDR4_DQS1N_B/DDR3_DQS3N/LPDDR3_DQS2N	DDR4_DQSL_N_B	LPDDR4_DQS1N_B	DDR3_DQS3N	LPDDR3_DQS2N			
L2	DDR_DQS1P_A/DDR4_DQSU_P_A/LPDDR4_DQS1P_A/DDR3_DQS1P/LPDDR3_DQS3P	DDR4_DQSU_P_A	LPDDR4_DQS1P_A	DDR3_DQS1P	LPDDR3_DQS3P			
B15	DDR_DQS1P_B/DDR4_DQSL_P_B/LPDDR4_DQS1P_B/DDR3_DQS3P/LPDDR3_DQS2P	DDR4_DQSL_P_B	LPDDR4_DQS1P_B	DDR3_DQS3P	LPDDR3_DQS2P			
B6	DDR4_A0/LPDDR4_CLKP_B/DDR3_A9/-/AC0	DDR4_A0	LPDDR4_CLKP_B	DDR3_A9	-			
F5	DDR4_A1/-/DDR3_A2/-/AC1	DDR4_A1	-	DDR3_A2	-			
B1	DDR4_A2/LPDDR4_A1_A/DDR3_A4/LPDDR3_A6/AC2	DDR4_A2	LPDDR4_A1_A	DDR3_A4	LPDDR3_A6			
F4	DDR4_A3/LPDDR4_CKE1_A/DDR3_A3/-/AC3	DDR4_A3	LPDDR4_CKE1_A	DDR3_A3	-			
D9	DDR4_A4/LPDDR4_A3_B/DDR3_BA1/LPDDR3_A3/AC4	DDR4_A4	LPDDR4_A3_B	DDR3_BA1	LPDDR3_A3			
B7	DDR4_A5/LPDDR4_A5_B/DDR3_A11/LPDDR3_A2/AC5	DDR4_A5	LPDDR4_A5_B	DDR3_A11	LPDDR3_A2			
A7	DDR4_A6/LPDDR4_A1_B/DDR3_A13/LPDDR3_A1/AC6	DDR4_A6	LPDDR4_A1_B	DDR3_A13	LPDDR3_A1			
A8	DDR4_A7/LPDDR4_ODT0_CA_B/DDR3_A8/-/AC7	DDR4_A7	LPDDR4_ODT0_CA_B	DDR3_A8	-			
C1	DDR4_A8/LPDDR4_ODT0_CA_A/DDR3_A6/LPDDR3_A9/AC8	DDR4_A8	LPDDR4_ODT0_CA_A	DDR3_A6	LPDDR3_A9			
A5	DDR4_A9/LPDDR4_CLKN_B/DDR3_A5/-/AC9	DDR4_A9	LPDDR4_CLKN_B	DDR3_A5	-			
D6	DDR4_A10/LPDDR4_CKE0_B/DDR3_A10/-/AC10	DDR4_A10	LPDDR4_CKE0_B	DDR3_A10	-			
C2	DDR4_A11/LPDDR4_A0_A/DDR3_A7/LPDDR3_A8/AC11	DDR4_A11	LPDDR4_A0_A	DDR3_A7	LPDDR3_A8			
C4	DDR4_A12/LPDDR4_A3_A/DDR3_BA2/-/AC12	DDR4_A12	LPDDR4_A3_A	DDR3_BA2	-			
B8	DDR4_A13/LPDDR4_A0_B/DDR3_A14/LPDDR3_A0/AC13	DDR4_A13	LPDDR4_A0_B	DDR3_A14	LPDDR3_A0			
C5	DDR4_A14_WEn/LPDDR4_A4_A/DDR3_A15/LPDDR3_A5/AC14	DDR4_A14_WEn	LPDDR4_A4_A	DDR3_A15	LPDDR3_A5			
E4	DDR4_A15_CASn/LPDDR4_A2_A/DDR3_A0/-/AC15	DDR4_A15_CASn	LPDDR4_A2_A	DDR3_A0	-			
D5	DDR4_A16_RASn/LPDDR4_A5_A/DDR3_RASn/LPDDR3_A7/AC16	DDR4_A16_RASn	LPDDR4_A5_A	DDR3_RASn	LPDDR3_A7			
E6	DDR4_ACTn/LPDDR4_CKE1_B/DDR3_CASn/-/AC17	DDR4_ACTn	LPDDR4_CKE1_B	DDR3_CASn	-			
E11	DDR4_BA0/LPDDR4_A2_B/DDR3_A1/-/AC18	DDR4_BA0	LPDDR4_A2_B	DDR3_A1	-			
E9	DDR4_BA1/LPDDR4_A4_B/DDR3_A12/LPDDR3_A4/AC19	DDR4_BA1	LPDDR4_A4_B	DDR3_A12	LPDDR3_A4			
F8	DDR4_BG0/LPDDR4_ODT1_CA_B/DDR3_WEn/-/AC20	DDR4_BG0	LPDDR4_ODT1_CA_B	DDR3_WEn	-			
F7	DDR4_BG1/LPDDR4_ODT1_CA_A/DDR3_BA0/-/AC21	DDR4_BG1	LPDDR4_ODT1_CA_A	DDR3_BA0	-			
B3	DDR4_CKE/LPDDR4_CKE0_A/DDR3_CKE/LPDDR3_CKE/AC22	DDR4_CKE	LPDDR4_CKE0_A	DDR3_CKE	LPDDR3_CKE			

Rockchip Confidential

PIN	PIN Name	Func1	Func2	Func3	Func4	Func5	Func6	Die Power Domain
A4	DDR4_CLKN/LPDDR4_CLKN_A/DDR3_CLKN/LPDDR3_CLKN/AC24	DDR4_CLKN	LPDDR4_CLKN_A	DDR3_CLKN	LPDDR3_CLKN			
B4	DDR4_CLKP/LPDDR4_CLKP_A/DDR3_CLKP/LPDDR3_CLKP/AC23	DDR4_CLKP	LPDDR4_CLKP_A	DDR3_CLKP	LPDDR3_CLKP			
A2	DDR4_CS0n/LPDDR4_CS0n_A/DDR3_ODT1/LPDDR3_ODT0/AC25	DDR4_CS0n	LPDDR4_CS0n_A	DDR3_ODT1	LPDDR3_ODT0			
B2	DDR4_CS1n/LPDDR4_CS1n_A/DDR3_CS1n/LPDDR3_ODT1/AC26	DDR4_CS1n	LPDDR4_CS1n_A	DDR3_CS1n	LPDDR3_ODT1			
E8	DDR4_ODT0/LPDDR4_CS1n_B/DDR3_ODT0/LPDDR3_CS1n/AC27	DDR4_ODT0	LPDDR4_CS1n_B	DDR3_ODT0	LPDDR3_CS1n			
D8	DDR4_ODT1/LPDDR4_CS0n_B/DDR3_CS0n/LPDDR3_CS0n/AC28	DDR4_ODT1	LPDDR4_CS0n_B	DDR3_CS0n	LPDDR3_CS0n			
P7	DDR_ECC_DM	DDR_ECC_DM						
P5	DDR_ECC_DQ0	DDR_ECC_DQ0						
M4	DDR_ECC_DQ1	DDR_ECC_DQ1						
M5	DDR_ECC_DQ2	DDR_ECC_DQ2						
R5	DDR_ECC_DQ3	DDR_ECC_DQ3						
M7	DDR_ECC_DQ4	DDR_ECC_DQ4						
R7	DDR_ECC_DQ5	DDR_ECC_DQ5						
P4	DDR_ECC_DQ6	DDR_ECC_DQ6						
R4	DDR_ECC_DQ7	DDR_ECC_DQ7						
P1	DDR_ECC_DQS_N	DDR_ECC_DQS_N						
P2	DDR_ECC_DQS_P	DDR_ECC_DQS_P						
F11	DDR4_RESETn/LPDDR4_RESETn/DDR3_RESETn/AC29	DDR4_RESETn	LPDDR4_RESETn	DDR3_RESETn				
H7	DDR_RZQ	DDR_RZQ						
P8	DDR_VREFOUT	DDR_VREFOUT						

Notes:

① *Pad types: I = digital-input, O = digital-output, I/O = digital input/output (bidirectional) , A=Analog IO*

② *Def default IO direction for digital IO*

③ *Output Drive Unit is mA, only Digital IO has drive value;*

④ *INT: interrupt support.*

⑤ *The power configuration of all GPIOs should be matched with the actual power supply,*
Otherwise it may cause GPIO overvoltage damage, please refer to the Hardware Design Guide for details

Rockchip Confidential

2.9 IO Pin Name Description

This sub-chapter will focus on the detailed function description of every pins based on different interface.

Table 2-4 IO function description list

Interface	Pin Name	Dir.	Description
Misc	XIN24M	I	Clock input of 24MHz crystal
	XOUT24M	O	Clock output of 24MHz crystal
	NPOR	I	Chip hardware reset
	CLK32K_IN	I	32K clock input
	CLK32K_OUT	O	32K clock output

Interface	Pin Name	Dir.	Description
SWJ-DP	ARMJTAG_TCK	I	SWD interface clock input
	ARMJTAG_TMS	I/O	SWD interface data inout

Interface	Pin Name	Dir.	Description
MCU_JTAG	MCU_JTAGTCK	I	JTAG interface clock input
	MCU_JTAGTRST	I	JTAG interface reset input
	MCU_JTAGTMS	I	JTAG interface TMS input
	MCU_JTAGTDO	O	JTAG interface TDO
	MCU_JTAGTDI	I	JTAG interface TDI

Interface	Pin Name	Dir.	Description
SD/MMC Host Controller	SDMMC[*i*]_CLK(*i*=0~2)	O	sdmmc card clock
	SDMMC[*i*]_CMD(*i*=0~2)	I/O	sdmmc card command output and response input
	SDMMC[*i*] _D[j](*i*=0~2) (*j*=0~3)	I/O	sdmmc card data input and output
	SDMMC[*i*]_DETN(*i*=0~2)	I	sdmmc card detect signal, 0 represents presence of card

Interface	Pin Name	Dir.	Description
eMMC Interface	EMMC_CLKOUT	O	emmc card clock
	EMMC_CMD	I/O	emmc card command output and response input
	EMMC_D[*i*](*i*=0~7)	I/O	emmc card data input and output

Interface	Pin Name	Dir.	Description
Nand Flash Interface	FLASH_ALE	O	Flash address latch enable signal
	FLASH_CLE	O	Flash command latch enable signal
	FLASH_WRN	O	Flash write enable and clock signal
	FLASH_RDN	O	Flash read enable and write/read signal
	FLASH_D[*i*] (*i*=0~7)	I/O	Flash data inputs/outputs signal
	FLASH*x*_DQS	I/O	Flash data strobe signal
	FLASH*x*_RDY	I	Flash ready/busy signal

Rockchip Confidential

Interface	Pin Name	Dir.	Description
	FLASH*x*_CSN[*i*]=0~1)	O	Flash chip enable signal for chip i, i=0~7

Interface	Pin Name	Dir.	Description
FSPI Controller	FSPI_CLK	I/O	FSPI serial clock
	FSPI_CSN[*i*] *(i=0)*	I/O	FSPI chip select signal, low active
	FSPI_SIO[*i*] *(i=0,3)*	O	FSPI serial data inout

Interface	Pin Name	Dir.	Description
LCDC	LCDC_DCLK	O	LCDC RGB interface display clock out
	LCDC_VSYNC	O	LCDC RGB interface vertical sync pulse
	LDCD_HSYNC	O	LCDC RGB interface horizontal sync pulse
	LCDC_DEN	O	LCDC RGB interface data enable
	LCDC_D[*i*] (*i*=0~23)	O	LCDC data output/input

Interface	Pin Name	Dir.	Description
BT1120	BT1120_CLK	O	BT1120 interface display clock out
	BT1120_D[*i*] (*i*=0~15)	O	BT1120 data output

Interface	Pin Name	Dir.	Description
BT656	BT656_CLK	O	BT656 interface display clock out
	BT656_D[*i*] (*i*=0~7)	O	BT656 data output

Interface	Pin Name	Dir.	Description
EBC	EBC_SDCLK	O	EBC source clock
	EBC_GDCLK	O	EBC gate clock
	EBC_SDOE	O	EBC source data enable
	EBC_SDLE	O	EBC source latch enable
	EBC_SDSHR	O	EBC source scan Dir.
	EBC_GDSP	O	EBC gate start pulse
	EBC_GDOE	O	EBC gate output enable
	EBC_VCOM	O	EBC VCOM enable
	EBC_SDCE *i*(*i*=0~3)	O	EBC Source chip slelect
	EBC_SDDO *i*(*i*=0~15)	O	EBC source data output

Interface	Pin Name	Dir.	Description
I2S1/PCM Controller	I2S1_MCLK	O	I2S/PCM clock source
	I2S1_SCLKTX	I/O	I2S/PCM serial clock for transmit data
	I2S1_SCLKRX	I/O	I2S/PCM serial clock for receive data
	I2S1_LRCKRX	I/O	I2S/PCM left & right channel signal for receiving serial data, synchronous left & right channel in I2S mode and the beginning of a group of left & right channels in PCM mode
	I2S1_LRCKTX	I/O	I2S/PCM left & right channel signal for transmitting serial data, synchronous left & right

Rockchip Confidential

Interface	Pin Name	Dir.	Description
			channel in I2S mode and the beginning of a group of left & right channels in PCM mode
	I2S1_SDI[*i*](*i*=1~3)	I	I2S/PCM serial data input
	I2S1_SDO[*i*](*i*=1~3)	O	I2S/PCM serial data output

Interface	Pin Name	Dir.	Description
I2S2/PCM Controller	I2S2_MCLK	O	I2S/PCM clock source
	I2S2_SCLKRX	I/O	I2S/PCM serial clock for receive data
	I2S2_SCLKTX	I/O	I2S/PCM serial clock for transmit data
	I2S2_LRCKRX	I/O	I2S/PCM left & right channel signal for receiving serial data, synchronous left & right channel in I2S mode and the beginning of a group of left & right channels in PCM mode
	I2S2_LRCKTX	I/O	I2S/PCM left & right channel signal for transmitting serial data, synchronous left & right channel in I2S mode and the beginning of a group of left & right channels in PCM mode
	I2S2_SDI	I	I2S/PCM serial data input
	I2S2_SDO	O	I2S/PCM serial data output

Interface	Pin Name	Dir.	Description
I2S3/PCM Controller	I2S3_MCLK	O	I2S/PCM clock source
	I2S3_SCLK	I/O	I2S/PCM serial clock
	I2S3_LRCK	I/O	I2S/PCM left & right channel clock, synchronous left & right channel in I2S mode and the beginning of a group of left & right channels in PCM mode
	I2S3_SDI	I	I2S/PCM serial data input
	I2S3_SDO	O	I2S/PCM serial data output

Interface	Pin Name	Dir.	Description
SPDIF	SPDIF_TX	O	S/PDIF data output

Interface	Pin Name	Dir.	Description
PDM	PDM_CLK	O	PDM sampling clock
	PDM_SDI[*i*](*i*=0~3)	I	PDM data

Interface	Pin Name	Dir.	Description
CAN	CAN_RXD	I	CAN receive data
	CAN_TXD	O	CAN transmit data

Interface	Pin Name	Dir.	Description
Audio PWM	AUDPWM_L	O	Audio PWM left channel data
	AUDPWM_R	O	Audio PWM right channel data

Interface	Pin Name	Dir.	Description
Digital Audio CODEC	ACODEC_DAC_CLK	O	CODEC DAC clock output signal
	ACODEC_ADC_CLK	O	CODEC ADC clock output signal
	ACODEC_DAC_SYNC	O	CODEC DAC synchronous signal

Rockchip Confidential

Interface	Pin Name	Dir.	Description
	ACODEC_ADC_SYNC	O	CODEC ADC synchronous signal
	ACODEC_DAC_DATAR	O	CODEC DAC right channel data
	ACODEC_DAC_DATAL	O	CODEC DAC left channel data
	ACODEC_ADC_DATA	I	CODEC ADC data

Interface	Pin Name	Dir.	Description
Smart Card	SCR_CLK	O	Smart Card clock
	SCR_RST	O	Smart Card reset
	SCR_DET	I	Smart Card detect
	SCR_IO	I/O	Smart Card data

Interface	Pin Name	Dir.	Description
SPI0	SPI0_CLK	I/O	SPI serial clock
	SPI0_CSN[*i*](*i*=0)	I/O	SPI chip select signal, low active
	SPI0_MOSI	I/O	SPI serial data
	SPI0_MISO	I/O	SPI serial data

Interface	Pin Name	Dir.	Description
SPI1	SPI1_CLK	I/O	SPI serial clock
	SPI1_CSN[*i*](*i*=0,1)	I/O	SPI chip select signal, low active
	SPI1_MOSI	I/O	SPI serial data
	SPI1_MISO	I/O	SPI serial data

Interface	Pin Name	Dir.	Description
SPI2	SPI2_CLK	I/O	SPI serial clock
	SPI2_CSN[*i*](*i*=0,1)	I/O	SPI chip select signal, low active
	SPI2_MOSI	I/O	SPI serial data
	SPI2_MISO	I/O	SPI serial data

Interface	Pin Name	Dir.	Description
SPI3	SPI3_CLK	I/O	SPI serial clock
	SPI3_CSN[*i*](*i*=0,1)	I/O	SPI chip select signal, low active
	SPI3_MOSI	I/O	SPI serial data
	SPI3_MISO	I/O	SPI serial data

Interface	Pin Name	Dir.	Description
PWM	PWM0	I/O	Pulse Width Modulation input and output
	PWM1	I/O	Pulse Width Modulation input and output
	PWM2	I/O	Pulse Width Modulation input and output

Rockchip Confidential

Interface	Pin Name	Dir.	Description
	PWM3_IR	I/O	Pulse Width Modulation input and output, used for IR application recommended
	PWM4	I/O	Pulse Width Modulation input and output
	PWM5	I/O	Pulse Width Modulation input and output
	PWM6	I/O	Pulse Width Modulation input and output
	PWM7_IR	I/O	Pulse Width Modulation input and output, used for IR application recommended
	PWM8	I/O	Pulse Width Modulation input and output
	PWM9	I/O	Pulse Width Modulation input and output
	PWM10	I/O	Pulse Width Modulation input and output
	PWM11_IR	I/O	Pulse Width Modulation input and output, used for IR application recommended
	PWM12	I/O	Pulse Width Modulation input and output
	PWM13	I/O	Pulse Width Modulation input and output
	PWM14	I/O	Pulse Width Modulation input and output
	PWM15_IR	I/O	Pulse Width Modulation input and output, used for IR application recommended

Interface	Pin Name	Dir.	Description
I2C	I2C[*i*]_SDA(*i*=0,1,2,3,4,5)	I/O	I2C data
	I2C[*i*]_SCL(*i*=0,1,2,3,4,5)	I/O	I2C clock

Interface	Pin Name	Dir.	Description
UART	UART[*i*]_RX(*i*=1~9)	I	UART serial data input
	UART[*i*]_TX(*i*=1~9)	O	UART serial data output
	UART[*i*]_CTS(*i*=1~9)	I	UART clear to send modem status input
	UART[*i*]_RTS(*i*=1~9)	O	UART modem control request to send output

Interface	Pin Name	Dir.	Description
GMAC	GMAC[*i*]_CLK(*i*=0,1)	I/O	RMII REC_CLK output or GMAC external clock input
	GMAC[*i*]_TXCLK(*i*=0,1)	O	RGMII TX clock output
	GMAC[*i*]_RXCLK(*i*=0,1)	I	RGMII RX clock input
	GMAC[*i*]_MDC(*i*=0,1)	O	GMAC management interface clock
	GMAC[*i*]_MDIO(*i*=0,1)	I/O	GMAC management interface data
	GMAC[*i*]_TXD*i*(*j*=0~3) (*i*=0,1)	O	GMAC TX data
	GMAC[*i*]_RXD[*j*](*j*=0~3) (*i*=0,1)	I	GMAC RX data
	GMAC[*i*]_TXEN(*i*=0,1)	O	GMAC TX data enable
	GMAC[*i*]_RXDV(*i*=0,1)	I	GMAC RX data valid signal
	GMAC[*i*]_RXER(*i*=0,1)	I	GMAC RX error signal

Rockchip Confidential

Interface	Pin Name	Dir.	Description
MIPI_DSI0	MIPI_DSI_TX0_D[*i*]N (*i*=0~3)	O	MIPI DSI negative differential data line transceiver output
	MIPI_DSI_TX0_D[*i*]P (*i*=0~3)	O	MIPI DSI positive differential data line transceiver output
	MIPI_DSI_TX0_CLKP	O	MIPI DSI positive differential clock line transceiver output
	MIPI_DSI_TX0_CLKN	O	MIPI DSI negative differential clock line transceiver output

Interface	Pin Name	Dir.	Description
MIPI_DSI1	MIPI_DSI_TX1_D[*i*]N (*i*=0~3)	O	MIPI DSI negative differential data line transceiver output
	MIPI_DSI_TX1_D[*i*]P (*i*=0~3)	O	MIPI DSI positive differential data line transceiver output
	MIPI_DSI_TX1_CLKP	O	MIPI DSI positive differential clock line transceiver output
	MIPI_DSI_TX1_CLKN	O	MIPI DSI negative differential clock line transceiver output

Interface	Pin Name	Dir.	Description
LVDS0	LVDS_TX0_D[*i*]N(*i*=0~3)	O	LVDS negative differential data line transceiver output
	LVDS_TX0_D[*i*]P(*i*=0~3)	O	LVDS positive differential data line transceiver output
	LVDS_TX0_CLKP	O	LVDS positive differential clock line transceiver output
	LVDS_TX0_CLKN	O	LVDS negative differential clock line transceiver output

Interface	Pin Name	Dir.	Description
LVDS1	LVDS_TX1_D[*i*]N(*i*=0~3)	O	LVDS negative differential data line transceiver output
	LVDS_TX1_D[*i*]P(*i*=0~3)	O	LVDS positive differential data line transceiver output
	LVDS_TX1_CLKP	O	LVDS positive differential clock line transceiver output
	LVDS_TX1_CLKN	O	LVDS negative differential clock line transceiver output

Interface	Pin Name	Dir.	Description
MIPI_CSI	MIPI_CSI_DN[*i*] (*i*=0~3)	I	MIPI CSI negative differential data line transceiver output
	MIPI_CSI_DP[*i*] (*i*=0~3)	I	MIPI CSI positive differential data line transceiver output
	MIPI_CSI_CLK[*i*]P(*i*=0~1)	I	MIPI CSI positive differential clock line transceiver output

Rockchip Confidential

Interface	Pin Name	Dir.	Description
	MIPI_CSI_CLK[*i*]N(*i*=0~1)	I	MIPI CSI negative differential clock line transceiver output

Interface	Pin Name	Dir.	Description
Camera Interface	CIF_CLKIN	I	Camera interface input pixel clock
	CAM_CLKOUT0	O	Camera interface output work clock
	CAM_CLKOUT1	O	Camera interface output work clock
	CIF_VSYNC	I	Camera interface vertical sync signal
	CIF_HREF	I	Camera interfacehorizontal sync signal
	CIF_D[*i*] (*i*=0~15)	I	Camera interface input pixel data

Interface	Pin Name	Dir.	Description
PCIe2	PCIE20_REFCLKN PCIE20_REFCLKP	I/O	100MHz differential reference clock for PCIe peripheral
	PCIE20_TXN PCIE20_TXP	O	PCIe differential data output signals
	PCIE20_RXN PCIE20_RXP	I	PCIe differential data input signals
	PCIE20_BUTTONRSTN	I	PCIe Reset request
	PCIE20_WAKENM0	I/O	PCIe wake up
	PCIE20_PERSTNM0	I	PCIe warm reset request
	PCIE20_CLKREQN	I	PCIe clock request from PCIe peripheral

Interface	Pin Name	Dir.	Description
PCIe3	PCIE30_REFCLKN PCIE30_REFCLKP	I	100MHz differential reference clock out for PCIe peripheral
	PCIE30_RESREF	I	PCIe reference resistor connection
	PCIE30_TX[*i*]N (*i*=0~1) PCIE30_TX[*i*]P (*i*=0~1)	O	PCIe differential data output signals
	PCIE30_RX[*i*]N (*i*=0~1) PCIE30_RX[*i*]P (*i*=0~1)	I	PCIe differential data input signals

Interface	Pin Name	Dir.	Description
PCIe3 Misc Signal	PCIE30X1_BUTTONRSTN	I	PCIe Reset request
	PCIE30X1_WAKEN	I/O	PCIe wake up
	PCIE30X1_PERSTN	I	PCIe warm reset request
	PCIE30X1_CLKREQN	I	PCIe clock request from PCIe peripheral
	PCIE30X2_BUTTONRSTN	I	PCIe Reset request
	PCIE30X2_WAKEN	I/O	PCIe wake up
	PCIE30X2_PERSTN	I	PCIe warm reset request
	PCIE30X2_CLKREQN	I	PCIe clock request from PCIe peripheral

Rockchip Confidential

Interface	Pin Name	Dir.	Description
USB 2.0	USB_HOST2_DP	I/O	USB 2.0 Data signal DP
	USB_HOST2_DM	I/O	USB 2.0 Data signal DM
	USB_HOST3_DP	I/O	USB 2.0 Data signal DP
	USB_HOST3_DM	I/O	USB 2.0 Data signal DM

Interface	Pin Name	Dir.	Description
USB3 OTG	USB3_OTG0_SSTXP USB3_ OTG0_SSTXN	O	USB 3.0 transmission signal DP/DM,
	USB3_OTG0_SSRXP USB3_OTG0_SSRXN	I	USB 3.0 receive signal DP/DM
	USB3_OTG0_DP	I/O	USB 2.0 Data signal DP
	USB3_OTG0_DM	I/O	USB 2.0 Data signal DM
	USB3_OTG0_VBUSDET	I	Insert detect when act as USB device
	USB3_OTG0_ID	I	USB Mini-Receptacle Identifier

Interface	Pin Name	Dir.	Description
USB3 Host	USB3_HOST1_SSTXP USB3_ HOST1_SSTXN	O	USB 3.0 transmission signal DP/DM,
	USB3_HOST1_SSRXP USB3_HOST1_SSRXN	I	USB 3.0 receive signal DP/DM

Interface	Pin Name	Dir.	Description
SATA	SATA[*i*]_TXN SATA[*i*]_TXP(*i*=0~2)	O	SATA transmission signal DP/DM
	SATA[*i*]_RXN SATA[*i*]_RXP(*i*=0~2)	I/O	SATA receive signal DP/DM
	SATA_CPDET	I	SATA cold presence detect
	SATA_MPSWITCH	I	SATA mechanical presence switch
	SATA_CPPOD	O	SATA presence power on device
	SATA[*i*]_ACTLED(*i*=0~2)	O	SATA active LED

Interface	Pin Name	Dir.	Description
QSMII/ SGMII	QSGMII_TXN QSGMII_TXP	O	SGMII/QSGMII transmission signal DP/DM
	QSGMII_RXN GSGMII_RXP	I/O	SGMII/QSGMII receive signal DP/DM

Interface	Pin Name	Dir.	Description
eDP	EDP_TX[*i*]P(*i*=0~3)	O	eDP data lane positive output

Rockchip Confidential

	EDP_TX[*i*]N(*i*=0~3)	O	eDP data lane negative output
	EDP_AUXP	I/O	eDP CH-AUX positive differential output
	EDP_AUXN	I/O	eDP CH-AUX negative differential output

Interface	Pin Name	Dir.	Description
HDMI	HDMI_TX_D[*i*]N(*i*=0~2)	O	HDMI negative TMDS differential line driver data output
	HDMI_X_D[*i*]P(*i*=0~2)	O	HDMI positive TMDS differential line driver data output
	HDMI_TX_CLKN	O	HDMI negative TMDS differential line driver clock output
	HDMI_TX_CLKP	O	HDMI positive TMDS differential line driver clock output
	HDMI_TX_REXT	I/O	HDMI reference resistor connection
	HDMI_TX_HPDIN	I/O	HDMI hot plug detect signal
	HDMITX_SDA	I/O	I2C data line for HDMI
	HDMITX_SCL	I/O	I2C clock line for HDMI
	HDMITX_CEC	I/O	HDMI CEC signal

Interface	Pin Name	Dir.	Description
	ISP_FLASHTRIGOUT	O	Hold signal for flash light
	ISP_PRELIGHTTRIG	O	Hold signal for prelight
	ISP_FLASHTRIGIN	I	External flash trigger pulse

Interface	Pin Name	Dir.	Description
DDR3 Interface	DDR3_CLKP	O	Active-high clock signal to the memory device.
	DDR3_CLKN	O	Active-low clock signal to the memory device.
	DDR3_CKE	O	Active-high clock enable signal to the memory device
	DDR3_CSN[*i*] (i=0,1)	O	Active-low chip select signal to the memory device.
	DDR3_RASn	O	Active-low row address strobe to the memory device.
	DDR3_CASn	O	Active-low column address strobe to the memory device.
	DDR3_WEn	O	Active-low write enable strobe to the memory device.
	DDR3_BA[*i*] (i=0,1,2)	O	Bank address signal to the memory device.
	DDR3_A[*i*] (i=0~15)	O	Address signal to the memory device.
	DDR3_DQ[*i*] (i=0~31)	I/O	BiDir.al data line to the memory device.
	DDR3_DQS[*i*]_P (i=0~3)	I/O	Active-high biDir.al data strobes to the memory device.
	DDR3_DQS[*i*]_N (i=0~3)	I/O	Active-low biDir.al data strobes to the memory device.
	DDR3_DM[*i*] (i=0~3)	O	Active-low data mask signal to the memory device.
	DDR3_ODT[*i*] (i=0,1)	O	On-Die Termination output signal for two chip select.

Rockchip Confidential

Interface	Pin Name	Dir.	Description
	DDR3_RESETn	O	Reset signal to the memory device

Interface	Pin Name	Dir.	Description
DDR4 Interface	DDR4_CLKP	O	Active-high clock signal to the memory device.
	DDR4_CLKN	O	Active-low clock signal to the memory device.
	DDR4_CKE	O	Active-high clock enable signal to the memory device
	DDR4_CS[*i*]n (i=0,1)	O	Active-low chip select signal to the memory device. A
	DDR4_BA[*i*] (i=0,1)	O	Bank address signal to the memory device.
	DDR4_BG[*i*] (i=0,1)	O	Bank address signal to the memory device.
	DDR4_A[*i*] (i=0~13)	O	Address signal to the memory device.
	DDR4_A14_Wen	O	Address signal to the memory device/Active-low write enable strobe to the memory device.
	DDR4_A15_CASn	O	Address signal to the memory device/Active-low column address strobe to the memory device.
	DDR4_A16_RASn	O	Address signal to the memory device/Active-low row address strobe to the memory device.
	DDR4_DQL_A[*i*] (i=0~7)	I/O	BiDir.al data line to the memory device.
	DDR4_DQH_A[*i*] (i=0~7)	I/O	BiDir.al data line to the memory device.
	DDR4_DQSL_P_A	I/O	Active-high biDir.al data strobes to the memory device.
	DDR4_DQSL_N_A	I/O	Active-low biDir.al data strobes to the memory device.
	DDR4_DQSH_P_A	I/O	Active-high biDir.al data strobes to the memory device.
	DDR4_DQSH_N_A	I/O	Active-low biDir.al data strobes to the memory device.
	DDR4_DML_A	O	Active-low data mask signal to the memory device.
	DDR4_DMH_A	O	Active-low data mask signal to the memory device.
	DDR4_DQL_B[*i*] (i=0~7)	I/O	BiDir.al data line to the memory device.
	DDR4_DQH_B[*i*] (i=0~7)	I/O	BiDir.al data line to the memory device.
	DDR4_DQSL_P_B	I/O	Active-high biDir.al data strobes to the memory device.
	DDR4_DQSL_N_B	I/O	Active-low biDir.al data strobes to the memory device.
	DDR4_DQSH_P_B	I/O	Active-high biDir.al data strobes to the memory device.
	DDR4_DQSH_N_B	I/O	Active-low biDir.al data strobes to the memory device.
	DDR4_DML_B	O	Active-low data mask signal to the memory device.
	DDR4_DMH_B	O	Active-low data mask signal to the memory device.

Rockchip Confidential

Interface	Pin Name	Dir.	Description
	DDR4_ODT[*i*] (i=0,1)	O	On-Die Termination output signal for two chip select.
	DDR4_RESETn	O	Reset signal to the memory device

Interface	Pin Name	Dir.	Description
LPDDR3 Interface	LPDDR3_CLKP	O	Active-high clock signal to the memory device.
	LPDDR3_CLKN	O	Active-low clock signal to the memory device.
	LPDDR3_CKE	O	Active-high clock enable signal to the memory device
	LPDDR3_CS[*i*]n (i=0,1)	O	Active-low chip select signal to the memory device. AThere are two chip select.
	LPDDR3_A[*i*] (i=0~9)	O	Address signal to the memory device.
	LPDDR3_DQ[*i*] (i=0~31)	I/O	BiDir.al data line to the memory device.
	LPDDR3_DQS[*i*]_P (i=0~3)	I/O	Active-high biDir.al data strobes to the memory device.
	LPDDR3_DQS[*i*]_N (i=0~3)	I/O	Active-low biDir.al data strobes to the memory device.
	LPDDR3_DM[*i*] (i=0~3)	O	Active-low data mask signal to the memory device.
	LPDDR3_ODT[*i*] (i=0,1)	O	On-Die Termination output signal for two chip select.

Interface	Pin Name	Dir.	Description
LPDDR4 /LPDDR4X Interface	LPDDR4_CLKP_A	O	Active-high clock signal to the memory device.
	LPDDR4_CLKN_A	O	Active-low clock signal to the memory device.
	LPDDR4_CKE0_A	O	Active-high clock enable signal to the memory device
	LPDDR4_CKE1_A	O	Active-high clock enable signal to the memory device
	LPDDR4_CS[*i*]n_A (i=0,1)	O	Active-low chip select signal to the memory device. AThere are two chip select.
	LPDDR4_A[*i*] (i=0~15)	O	Address signal to the memory device.
	LPDDR4_DQ[*i*]_A (i=0~15)	I/O	BiDir.al data line to the memory device.
	LPDDR4_DQS[*i*]P_A (i=0,1)	I/O	Active-high biDir.al data strobes to the memory device.
	LPDDR4_DQS[*i*]N_A (i=0,1)	I/O	Active-low biDir.al data strobes to the memory device.
	LPDDR4_DM[*i*] (i=0~3)	O	Active-low data mask signal to the memory device.
	LPDDR4_ODT[*i*]_CA_A (i=0,1)	O	On-Die Termination output signal for two chip select.
	LPDDR4_CLKP_B	O	Active-high clock signal to the memory device.
	LPDDR4_CLKN_B	O	Active-low clock signal to the memory device.
	LPDDR4_CKE0_B	O	Active-high clock enable signal to the memory device

Rockchip Confidential

Interface	Pin Name	Dir.	Description
	LPDDR4_CKE1_B	O	Active-high clock enable signal to the memory device
	LPDDR4_CS[*i*]n_B (i=0,1)	O	Active-low chip select signal to the memory device. AThere are two chip select.
	LPDDR4_B[*i*] (i=0~15)	O	Address signal to the memory device.
	LPDDR4_DQ[*i*]_B (i=0~15)	I/O	BiDir.al data line to the memory device.
	LPDDR4_DQS[*i*]P_B (i=0,1)	I/O	Active-high biDir.al data strobes to the memory device.
	LPDDR4_DQS[*i*]N_B (i=0,1)	I/O	Active-low biDir.al data strobes to the memory device.
	LPDDR4_DM[*i*] (i=0~3)	O	Active-low data mask signal to the memory device.
	LPDDR4_ODT[*i*]_CA_B (i=0,1)	O	On-Die Termination output signal for two chip select.
	LPDDR4_RESETn	O	Reset signal to the memory device

Rockchip Confidential

Chapter 3 Electrical Specification

3.1 Absolute Ratings

The below table provides the absolute ratings.
Absolute maximum ratings specify the values beyond which the device may be damaged permanently. Long-term exposure to absolute maximum ratings conditions may affect device reliability.
Absolute minimum ratings specify the values beyond which the device may be damaged permanently. Long-term exposure to absolute minimum ratings conditions may affect device reliability.

Table 3-1 Absolute ratings

Parameters	Related Power Group	Min	Max	Unit
Supply voltage for CPU	VDD_CPU	-0.3	1.2	V
Supply voltage for GPU	VDD_GPU	-0.3	1.2	V
Supply voltage for NPU	VDD_NPU	-0.3	1.2	V
Supply voltage for core logic	VDD_LOGIC	-0.3	1.1	V
0.9V supply voltage	PMU_VDD_LOGIC_0V9 PMUPLL_AVDD_0V9 USB2_AVDD_0V9 USB3_AVDD_0V9 MULTI_PHY_AVDD_0V9 PCIE30_AVDD_0V9 MIPI_CSI_RX_AVDD_0V9 MIPI_DSI_TX0/LVDS_TX0_AVDD_0V9 MIPI_DSI_TX1/LVDS_TX1_AVDD_0V9 EDP_TX_AVDD_0V9 HDMI_TX_AVDD_0V9	-0.3	1.1	V
1.8V supply voltage	PMUPLL_AVDD_1V8 SYSPLL_AVDD_1V8 MULTI_PHY_AVDD_1V8 USB2_AVDD_1V8 USB3_AVDD_1V8 MULTI_PHY_AVDD_1V8 PCIE30_AVDD_1V8 MIPI_CSI_RX_AVDD_1V8 MIPI_DSI_TX0/LVDS_TX0_AVDD_1V8 MIPI_DSI_TX1/LVDS_TX1_AVDD_1V8 EDP_TX_AVDD_1V8 HDMI_TX_AVDD_1V8 OTP_VCC_1V8	-0.3	1.98	V
3.3V supply voltage	USB2_AVDD_3V3 USB3_AVDD_3V3	-0.3	3.63	V
Supply voltage for DDR IO	DDRPHY_VDDQ	-0.3	1.65	V
Storage Temperature	Tstg	-40	125	℃
Max Conjunction Temperature	Tj	NA	125	℃

Rockchip Confidential

3.2 Recommended Operating Conditions

The following table describes the recommended operating conditions.

Table 3-2 Recommended operating conditions

Parameters	Symbol	Min	Typ	Max	Unit
Voltage for CPU	VDD_CPU	0.8	0.9	1.15	V
Voltage for GPU	VDD_GPU	0.8	0.9	1.1	V
Voltage for NPU	VDD_NPU	0.8	0.9	1.1	V
Voltage for core logic	VDD_LOGIC	0.81	0.9	0.99	V
Voltage for PMU	PMU_VDD_LOGIC_0V9	0.81	0.9	0.99	V
PMUIO1 GPIO Power	PMUIO1	2.97	3.3	3.63	V
Digital GPIO Power (3.3V/1.8V)②	VCCIO1,VCCIO2, VCCIO3, VCCIO4VCCIO5, VCCIO6, VCCIO7, PMUIO2	2.97 1.62	3.3 1.8	3.63 1.98	V
DDR3 IO VDDQ/VDDQL power	DDRPHY_VDDQ/DDRPHY_VDDQL	1.425	1.5	1.575	V
DDR3L IO VDDQ/VDDQL Power	DDRPHY_VDDQ/DDRPHY_VDDQL	1.283	1.35	1.417	V
LPDDR3 IO VDDQ/VDDQL Power	DDRPHY_VDDQ/DDRPHY_VDDQL	0.994	1.2	1.3	V
DDR4 IO VDDQ/VDDQL Power	DDRPHY_VDDQ/DDRPHY_VDDQL	0.994	1.2	1.3	V
LPDDR4 IO VDDQ/VDDQL Power	DDRPHY_VDDQ/DDRPHY_VDDQL	1.0	1.1	1.21	V
LPDDR4X IO VDDQ Power	DDRPHY_VDDQ	1.0	1.1	1.21	V
LPDDR4X IO VDDQL Power	DDRPHY_VDDQL	0.54	0.6	0.66	V
PMU PLL Analog Power(0.9V)	PMUPLL_AVDD_0V9	0.81	0.9	0.99	V
PMU PLL Analog Power(1.8V)	PMUPLL_AVDD_1V8	1.62	1.8	1.98	V
System PLL Analog Power(0.9V)	SYSPLL_AVDD_0V9	0.81	0.9	0.99	V
System PLL Analog Power(1.8V)	SYSPLL_AVDD_1V8	1.62	1.8	1.98	V
USB 2.0 Analog Power (0.9V)	USB2_AVDD_0V9	0.81	0.9	0.99	V
USB 2.0 Analog Power (1.8V)	USB2_AVDD_1V8	1.62	1.8	1.98	V
USB 2.0 Analog Power (3.3V)	USB2_AVDD_3V3	2.97	3.3	3.63	V
USB 3.0 Analog Power (0.9V)	USB3_AVDD_0V9	0.81	0.9	0.99	V
USB 3.0 Analog Power (1.8V)	USB3_AVDD_1V8	1.62	1.8	1.98	V
USB 3.0 Analog Power (3.3V)	USB3_AVDD_3V3	2.97	3.3	3.63	V
Multi-phy Analog Power(0.9V)	MULTI_PHY_AVDD_0V9	0.81	0.9	0.99	V
Multi-phy Analog Power(1.8V)	MULTI_PHY_AVDD_1V8	1.62	1.8	1.98	V
PCIe30 Analog Power(0.9V)	PCIE30_AVDD_0V9	0.81	0.9	0.99	V
PCIe30 Analog Power(1.8V)	PCIE30_AVDD_1V8	1.62	1.8	1.98	V
MIPI CSI Analog Power(0.9V)	MIPI_CSI_RX_AVDD_0V9	0.81	0.9	0.99	V
MIPI CSI Analog Power(1.8V)	MIPI_CSI_RX_AVDD_1V8	1.62	1.8	1.98	V
MIPI DSI Analog Power(0.9V)	MIPI_DSI_TX0/LVDS_TX0_AVDD_0V9	0.81	0.9	0.99	V
MIPI DSI Analog Power (1.8V)	MIPI_DSI_TX0/LVDS_TX0_AVDD_1V8	1.62	1.8	1.98	V
MIPI DSI Analog Power(0.9V)	MIPI_DSI_TX1/LVDS_TX1_AVDD_0V9	0.81	0.9	0.99	V
MIPI DSI Analog Power (1.8V)	MIPI_DSI_TX1/LVDS_TX1_AVDD_1V8	1.62	1.8	1.98	V
eDP Analog Power(0.9V)	EDP_TX_AVDD_0V9	0.81	0.9	0.99	V
eDP Analog Power (1.8V)	EDP_TX_AVDD_1V8	1.62	1.8	1.98	V
HDMI Analog Power(0.9V)	HDMI_TX_AVDD_0V9	0.81	0.9	0.99	V
HDMI Analog Power (1.8V)	HDMI_TX_AVDD_1V8	1.62	1.8	1.98	V
SARADC Analog Power(1.8V)	SARADC_AVDD_1V8	1.62	1.8	1.98	V

Rockchip Confidential

Parameters	Symbol	Min	Typ	Max	Unit
OTP Analog Power(1.8V)	OTP_VCC_1V8	1.62	1.8	1.98	V
OSC input clock frequency		NA	24	NA	MHz
Max CPU frequency		NA	NA	2.0	GHz
Max GPU frequency		NA	NA	800	MHz
Max NPU frequency		NA	NA	1.0	GHz
Ambient Operating Temperature	T_A	0	NA	80	℃

Notes:

① *Symbol name is same as the pin name in the io descriptions*

② *The power configuration of all GPIOs should be matched with the actual power supply, Otherwise it may cause GPIO overvoltage damage, please refer to the Hardware Design Guide for details*

3.3 DC Characteristics

Table 3-3 DC Characteristics

Parameters		Symbol	Min	Typ	Max	Unit
Digital GPIO @3.3V	Input Low Voltage	Vil	-0.3	NA	0.8	V
	Input High Voltage	Vih	2.0	NA	VCC+0.3	V
	Output Low Voltage	Vol	-0.3	NA	0.4	V
	Output High Voltage	Voh	2.4	NA	VCC+0.3	V
	Pullup Resistor	Rpu	16	NA	43	Kohm
	Pulldown Resistor	Rpd	16	NA	43	Kohm
Digital GPIO @1.8V	Input Low Voltage	Vil	-0.3	NA	0.35*VCC	V
	Input High Voltage	Vih	0.65*VCC	NA	VCC+0.3	V
	Output Low Voltage	Vol	-0.3	NA	0.4	V
	Output High Voltage	Voh	1.4	NA	VCC+0.3	V
	Pullup Resistor	Rpu	16	NA	43	Kohm
	Pulldown Resistor	Rpd	16	NA	43	Kohm

Parameters		Symbol	Min	Typ	Max	Unit
DDR IO @DDR3 mode	Input High Voltage	Vih_ddr	Vref+0.1	NA	DDRPHY_VDDQ	V
	Input Low Voltage	Vil_ddr	VSSQ	NA	Vref-0.1	V
	output impedence	Rtt	20	NA	60	Ohm
DDR IO @DDR3L mode	Input High Voltage	Vih_ddr	Vref+0.1	NA	DDRPHY_VDDQ	V
	Input Low Voltage	Vil_ddr	VSSQ	NA	Vref-0.1	V
	output impedence	Rtt	20	NA	60	Ohm
DDR IO @DDR4 mode	Input High Voltage	Vih_ddr	Vref+0.1	NA	DDRPHY_VDDQ	V
	Input Low Voltage	Vil_ddr	VSSQ	NA	Vref-0.1	V
	output impedence	Rtt	20	NA	60	Ohm
DDR IO @ LPDDR3 mode	Input High Voltage	Vih_ddr	Vref+0.1	NA	DDRPHY_VDDQ	V
	Input Low Voltage	Vil_ddr	VSSQ	NA	Vref-0.1	V
	output impedence	Rtt	20	NA	60	Ohm

Rockchip Confidential

Parameters		Symbol	Min	Typ	Max	Unit
DDR IO @LPDDR4 mode	Input High Voltage	Vih_ddr	Vref+0.1	NA	DDRPHY_VDDQ	V
	Input Low Voltage	Vil_ddr	VSSQ	NA	Vref-0.1	V
	output impedence	Rtt	20	NA	60	Ohm
DDR IO @LPDDR4X mode	Input High Voltage	Vih_ddr	Vref+0.1	NA	DDRPHY_VDDQL	V
	Input Low Voltage	Vil_ddr	VSSQ	NA	Vref-0.1	V
	output impedence	Rtt	20	NA	60	Ohm

Parameters		Symbol	Min	Typ	Max	Unit
MIPI_LVDS Combo IO@LVDS mode	Output High Voltage	Voh			1.475	V
	Output Low Voltage	Vol	925	NA		mV
	Output differential voltage	|VOD|	250	NA	400	mV
	Output offset voltage	Vos	1125	NA	1275	mV
	Output impedance, single ended	Ro	40	NA	140	Ω
	Ro mismatch between A & B	ΔRo	NA	NA	10	%
	Change in |Vod| between 0 and 1	|ΔVod|	NA	NA	25	mV
	Change in Vod between 0 and 1	ΔVos	NA	NA	25	mV
MIPI_LVDS Combo IO@MIPI mode	Output High Voltage	Voh	1.08	1.2	1.32	V
	Output Low Voltage	Vol	-50	NA	50	mV
	HS TX static Common-mode voltage	VCMTX	150	200	250	mV
	VCMTX mismatch when output is Differential-1 or Differential-0	|ΔVCMTX(1,0)|	NA	NA	5	mV
	HS transmit differential voltage	|VOD|	140	200	270	mV
	VOD mismatch when output is Differential-1 or Differential-0	|ΔVOD|	NA	NA	14	mV
	HS output high voltage	VOHHS	NA	NA	360	mV
	Single ended output impedance	ZOS	40	50	62.5	Ω
	Single ended output impedance mismatch	ΔZOS	NA	NA	10	%

3.4 Electrical Characteristics for General IO

Table 3-4 Electrical Characteristics for Digital General IO

Parameters		Symbol	Test condition	Min	Typ	Max	Unit
Digital GPIO @3.3V	Input leakage current	Ii	Vin = 3.3V or 0V	NA	NA	10	uA
	Tri-state output leakage current	Ioz	Vout = 3.3V or 0V	NA	NA	10	uA
	High level input current	Iih	Vin = 3.3V, pulldown disabled	NA	NA	10	uA
			Vin = 3.3V, pulldown enabled	NA	NA	10	uA
	Low level input current	Iil	Vin = 0V, pullup disabled	NA	NA	10	uA
			Vin = 0V, pullup enabled	NA	NA	10	uA

Rockchip Confidential

Parameters		Symbol	Test condition	Min	Typ	Max	Unit
Digital GPIO @1.8V	Input leakage current	Ii	Vin = 1.8V or 0V	NA	NA	10	uA
	Tri-state output leakage current	Ioz	Vout = 1.8V or 0V	NA	NA	10	uA
	High level input current	Iih	Vin = 1.8V, pulldown disabled	NA	NA	10	uA
			Vin = 1.8V, pulldown enabled	NA	NA	10	uA
	Low level input current	Iil	Vin = 0V, pullup disabled	NA	NA	10	uA
			Vin = 0V, pullup enabled	NA	NA	10	uA

3.5 Electrical Characteristics for PLL

Table 3-5 Electrical Characteristics for Frac PLL

Parameters		Symbol	Test condition	Min	Typ	Max	Unit
Frac PLL	Input clock frequency(Frac)	F_{in}	Fin = FREF @1.8V/0.99V	1	NA	1200	MHz
	VCO operating range	F_{vco}	Fvco = Fref * FBDIV @3.3V/0.99V	950	NA	3800	MHz
	Output clock frequency	F_{out}	Fout = Fvco/POSTDIV @3.3V/0.99V	19	NA	3800	MHz
	Lock time	T_{lt}	@ 3.3V/0.99V, FREF=24M,REFDIV=1	NA	250	500	Input clock cycles

Table 3-6 Electrical Characteristics for Int-PLL

Parameters		Symbol	Test condition	Min	Typ	Max	Unit
Int PLL	Input clock frequency(Frac)	F_{in}	Fin = FREF @1.8V/0.99V	10	NA	800	MHz
	VCO operating range	F_{vco}	Fvco = Fref * FBDIV @3.3V/0.99V	475	NA	1900	MHz
	Output clock frequency	F_{out}	Fout = Fvco/POSTDIV @3.3V/0.99V	9	NA	1900	MHz
	Lock time	T_{lt}	@ 3.3V/0.99V, FREF=24M,REFDIV=1	NA	1000	1500	Input clock cycles

Notes:

① *REFDIV is the input divider value;*

② *FBDIV is the feedback divider value;*

③ *POSTDIV is the output divider value*

3.6 Electrical Characteristics for USB 2.0 Interface

Table 3-7 Electrical Characteristics for USB 2.0 Interface

Parameters	Symbol	Test condition	Min	Typ	Max	Unit
Transmitter						

Rockchip Confidential

Parameters	Symbol	Test condition	Min	Typ	Max	Unit
Output resistance	ROUT	Classic mode (Vout = 0 or 3.3V)	40.5	45	49.5	ohm
		HS mode (Vout = 0 to 800mV)	40.5	45	49.5	ohm
Output Capacitance	COUT	seen from D+ or D-	NA	NA	3	pF
Output Common Mode Voltage	VM	Classic (LS/FS) mode	1.45	1.65	1.85	V
		HS mode	0.175	0.2	0.225	V
Differential output signal high	VOH	Classic (LS/FS); Io=0mA	2.97	3.3	3.63	V
		Classic (LS/FS); Io=6mA	2.2	NA	NA	V
		HS mode; Io=0mA	360	400	440	mV
Differential output signal low	VOL	Classic (LS/FS); Io=0mA	-0.33	0	0.33	V
		Classic (LS/FS); Io=6mA	NA	0.3	0.8	V
		HS mode; Io=0mA	-40	0	40	mV
Receiver						
Receiver sensitivity	RSENS	Classic mode	NA	+-250	NA	mV
		HS mode	NA	+-25	NA	mV
Receiver common mode	RCM	Classic mode	0.8	1.65	2.5	V
		HS mode (differential and squelch comparator)	0.1	0.2	0.3	V
		HS mode (disconnect comparator)	0.5	0.6	0.7	V
Input capacitance (seen at D+ or D-)			NA	NA	3	pF
Squelch threshold			100	112	150	mV
Disconnect threshold			570	590	625	mV
High input level	VIH		0.6	NA	NA	V
Low input level	VIL		NA	NA	0.2	V

3.7 Electrical Characteristics for DDR IO

Table 3-8 Electrical Characteristics for DDR IO

Parameters		Symbol	Test condition	Min	Typ	Max	Unit
DDR IO @DDR3 mode	Input leakage current		@ 1.5V , 125℃	-80	NA	6	uA
DDR IO @DDR3L mode	Input leakage current		@ 1.35V , 125℃	-65	NA	5	uA
DDR IO @DDR4 mode	Input leakage current		@ 1.2V , 125℃	-50	NA	4	uA
DDR IO @LPDDR3 mode	Input leakage current		@ 1.2V , 125℃	-50	NA	4	uA
DDR IO @LPDDR4 mode	Input leakage current		@ 1.1V , 125℃	-45	NA	3.5	uA
DDR IO @LPDDR4X mode	Input leakage current		@ 0.6V , 125℃	-20	NA	1.5	uA

Rockchip Confidential

3.8 Electrical Characteristics for TSADC

Table 3-9 Electrical Characteristics for TSADC

Parameters	Symbol	Test condition	Min	Typ	Max	Unit
Temperature Resolution			NA	±5	NA	℃
Temperature Range			-20	NA	120	℃

3.9 Electrical Characteristics for MIPI DSI

Table 3-10 Electrical Characteristics for MIPI DSI

Parameters	Symbol	Test condition	Min	Typ	Max	Units
Common-mode variations above 450 MHz	ΔVcmtx(HF)		NA	NA	15	mVrms
Common-mode variations between 50MHz – 450MHz	ΔVcmtx(LF)		NA	NA	25	mVpeak
20%-80% rise time and fall time	Tr and Tf		NA	NA	0.3	UI
			10	NA	NA	ps

3.10 Electrical Characteristics for MIPI CSI

Table 3-11 Electrical Characteristics for MIPI CSI

Parameters	Symbol	Test condition	Min	Typ	Max	Units
Common-mode interference beyond 450 MHz	ΔVcmrx(HF)		NA	NA	100	mV
Common-mode interference 50MHz-450MHz	ΔVcmrx(LF)		NA	NA	50	mV
Common-mode termination	Ccm		NA	NA	60	pF
Input pulse rejection	Espike		NA	NA	300	V.ps
Minimum pulse width response	Tmin-rx		20	NA	NA	ns
Peak interference amplitude	Vint		NA	NA	200	mV
Interference frequency	Fint		450	NA	NA	MHz

3.11 Electrical Characteristics for HDMI

Table 3-12 Electrical Characteristics for HDMI

Parameters	Symbol	Test condition	Min	Typ	Max	Unit
Differential output signal rise time	tR	20~80% RL=50Ω	75	NA	NA	ps
	tR_DATA	20~80% RL=50Ω	42.5	NA	NA	ps
	tR_CLOCK	20~80% RL=50Ω	75	NA	NA	ps
Differential output signal fall time	tF	20~80% RL=50Ω	75	NA	NA	ps
	tF_DATA	20~80% RL=50Ω	42.5	NA	NA	ps
	tF_CLOCK	20~80% RL=50Ω	75	NA	NA	ps

Rockchip Confidential

3.12 Electrical Characteristics for multi-PHY

Table 3-13 Electrical Characteristics for PCIe PHY

Parameters	Symbol	Condition	Min	Typ	Max	Unit
Transmitter						
Differential p-pTx voltage swing	$V_{TX-DIFF-PP}$		0.8	NA	1.2	V
Low power differential p-p Tx voltage swing	$V_{TX-DIFF-PP-LOW}$		0.4	NA	1.2	V
Tx de-emphasis level ratio	$R_{TX-DIFF-DC}$		80	NA	120	ohm
Single Ended Output Resistance Matching	$R_{TX-DC-OFFSET}$		NA	NA	5	%
The amount of voltage change allowed during Receiver Detection	$V_{TX-RCV-DETECT}$		NA	NA	600	mV
Output rising time for 20% to 80%	Tr		25	NA	NA	ps
Output falling time for 20% to 80%	Tf		25	NA	NA	ps
AC Coupling Capacitor(USB3.0/PCIE2.1)	C_{TX}		75	NA	200	nF
AC Coupling Capacitor(SATA3.0)	C_{TX}		6	NA	12	nF
Unit Interval	UI		399.88	NA	400.12	ps
Input Voltage Swing	$V_{rxdpp-c}$		250	NA	1200	mV
Input differential impedance	R_{rxd-c}		80	NA	120	ohm
Single Ended input Resistance Matching	$T_{rxd-c-ms}$		NA	NA	5	%

Rockchip Confidential

Chapter 4 Thermal Management

4.1 Overview

For reliability and operability concerns, the absolute maximum junction temperature has to be below 125℃.

4.2 Package Thermal Characteristics

Table 4-1 provides the thermal resistance characteristics for the package used on the SoC. The resulting simulation data for reference only, please prevail in kind test.

Table 4-1 Thermal Resistance Characteristics

Parameter	Symbol	Typical	Unit
Junction-to-ambient thermal resistance	$\boldsymbol{\theta_{JA}}$	15.89	(℃/$\boldsymbol{W}$)
Junction-to-board thermal resistance	$\boldsymbol{\theta_{JB}}$	6.96	(℃/$\boldsymbol{W}$)
Junction-to-case thermal resistance	$\boldsymbol{\theta_{JC}}$	2.5	(℃/$\boldsymbol{W}$)

Note: The testing PCB is 4 layers, 114.3*mmx*101.6*mm, 1.6mm thickness, Ambient temperature is 25℃.*

Rockchip Confidential